RECOMMENDATIONS

Chapter 3 pointed out that the federal regulations concerning aircraft cabin ozone concentrations may be complied with either through the use of air treatment equipment (usually a catalytic converter) or through the choice of routes and altitudes that avoid areas of high ozone concentration. Ozone concentrations in aircraft depend also on latitude, not only on altitude. In 1978-1979, FAA monitored ozone on flights (mostly at 30,000-40,000 ft) and found that 11% were in violation of FAA's ozone concentration limits.[123] Because catalytic converters are subject to contamination and loss of efficiency, it is suggested that FAA establish policies for periodic removal and testing, so that the effective life of these units can be established. A program of monitoring is needed, to establish compliance with the existing standard and to determine whether the catalytic converters are operating normally and effectively. These data should be maintained in such a manner that they can be used for reference on passenger and crew exposures to ozone and to document the concentrations of ozone.

COSMIC RADIATION

We are exposed to ionizing radiation from several sources. Some is natural, such as cosmic radiation and terrestrial radiation, and some is from man-made sources, such as medical x rays, radioisotope drugs, nuclear fallout, nuclear power-plant emission, uranium and phosphate mine tailings, and nuclear waste materials. The question before the Committee is whether the incremental exposure of passengers and crew of commercial subsonic aircraft results in an unacceptable risk.

CHARACTERISTICS OF COSMIC RADIATION

Cosmic radiation is both solar and galactic in origin. Galactic radiation is composed of protons (87%), alpha particles (11%), a few nuclei with atomic number of 3 or more (approximately 1%), and electrons at energies up to 10^{20} eV (approximately 1%). The normative range of energies is 10^{8}-10^{11} eV. The sun generates a continuous flux of lower-energy (approximately 10^{3} eV)

2022933422

Source: https://www.industrydocuments.ucsf.edu/docs/jmvl0000

charged particles, and occasional solar magnetic disturbances generate large quantities of particles with energies up to several billion electron volts; the typical range is 1-100 MeV. The integrated flux of solar particles with energies of 20 MeV or more to the top of the earth's atmosphere varies with the 11-yr solar cycle between 10^5 and 10^{10} particles/cm^2 per year. The integrated flux of galactic particles is more constant, at about 10^8 particles/cm^2 per year.

These primary solar and galactic particles are almost completely attenuated as they penetrate the atmosphere down to an altitude of about 20 km (65,600 ft). However, as they pass through an increasingly dense atmosphere, they undergo nuclear interactions. Hence, at the altitude of 20 km only 50% of the original protons, 25% of the original alpha particles, and 3% of the heavier nuclei are left. But there is a buildup of secondary particles—neutrons, protons, and pions. Further pion decay produces electrons, photons, and muons. As a result, there is a cosmic-radiation maximum at 20 km. A net attenuation in particle flux density occurs at lower altitudes, reducing both the number and the energy of secondary particles produced. At altitudes below 6 km (19,700 ft), muons and associated decay electrons are the dominant components of the cosmic-ray particle flux. Figure 5-2 illustrates the components of cosmic-radiation dose equivalent rates as a function of altitude.

Secondary particles react with tissue through several mechanisms, including ionization (stripping of electrons) and direct inelastic and elastic collisions with nuclei. Both protons and gamma rays can interact with electrons and cause ionization of molecular structures in tissue. The heavier neutrons can have elastic collisions with lighter elements in tissue. Because of the abundance of the hydrogen nucleus in tissue, it is the most likely target nucleus for elastic scattering. Some of the energy is lost as gamma photons in inelastic collisions with heavier target nuclei. In both types of collisions, the now-energized target nucleus penetrates tissue as an ionizing particle. Like directly ionizing proton particles, these recoil protons are massive, compared with electrons, and dissipate energy over a relatively short path. Thus, the biologic effectiveness of radiation depends on the characteristics of the radiation, and not only on its energy. Because

2022933423

Source: https://www.industrydocuments.ucsf.edu/docs/jmvl0000

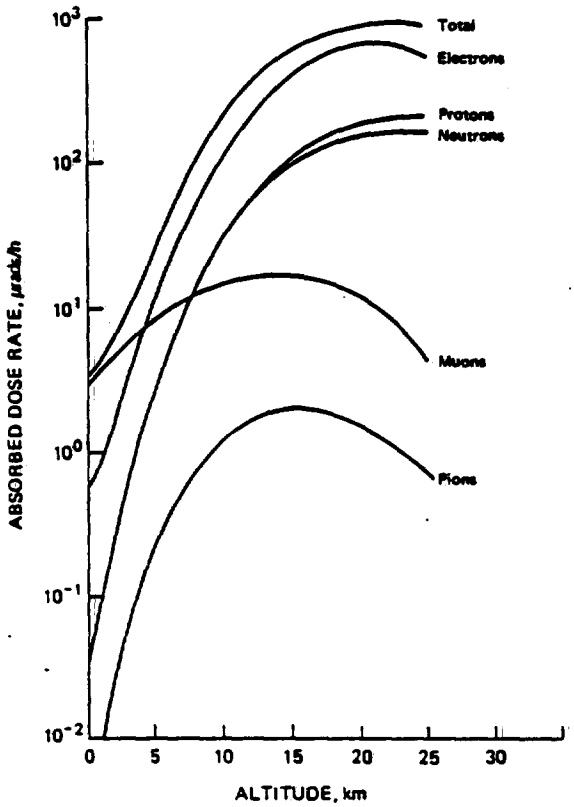

FIGURE 5-2 Absorbed dose rates at depth of 5 cm in 30-cm-thick slab of tissue from various components of cosmic radiation at solar minimum and at geomagnetic latitude of 55 degrees N. Reprinted with permission from National Council on Radiation Protection and Measurements.[109]

muons and associated fast electrons are essentially unattenuated by the body, the dose equivalent rate, in millirems per hour, as a function of altitude is determined essentially by the flux of protons and fast neutrons. The flux rates for fast neutrons at various altitudes are shown in Figure 5-3.

The dose equivalent rate of cosmic radiation in millirems per hour as a function of altitude is illustrated in Figure 5-4. The equivalent dose varies temporally (with time of maximal solar activity) and

2022933424

Source: https://www.industrydocuments.ucsf.edu/docs/jmvl0000

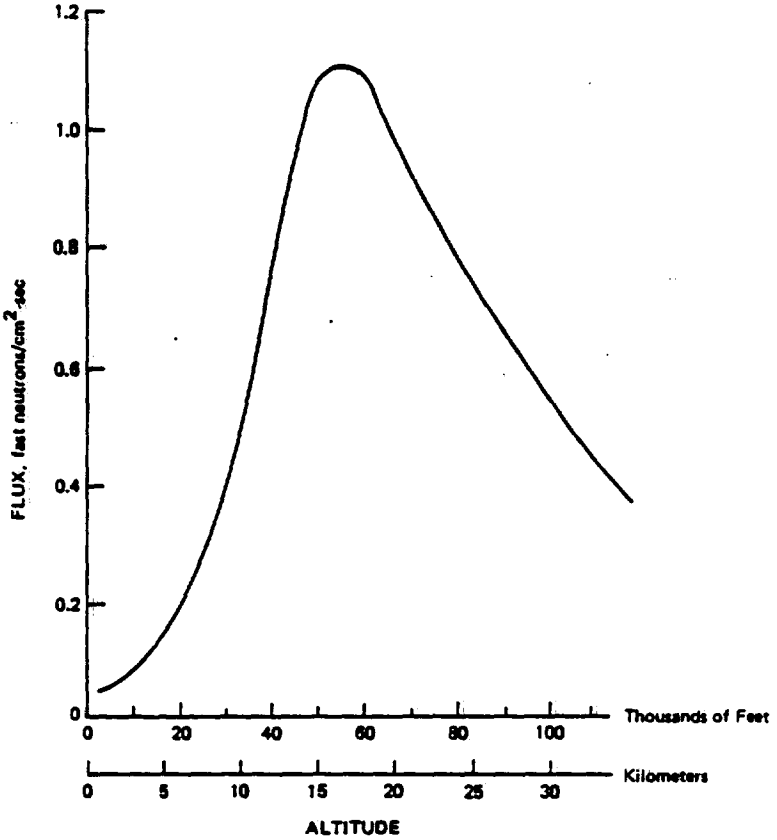

FIGURE 5-3 Altitude profile of atmospheric neutron flux. Adapted from Schaefer.[131]

with latitude. The spatial and temporal variations have been determined from several direct-measurement programs conducted during the late 1960s and early 1970s. At altitudes typical of subsonic commercial aircraft, 9-12 km (29,500-39,400 ft), the cosmic-ray dose equivalent rate is approximately 100 times the rate at sea level. The newer, higher-performance aircraft are certified to 46,000 ft (14 km). The cosmic-ray dose equivalent rate at 14 km is nearly twice the rate at 10 km (32,800 ft).

Variation in solar activity and the interaction of charged particles in the earth's magnetic field result in higher cosmic-radiation flux at higher latitudes and during solar flares. Figure 5-5 illustrates the profiles of dose equivalent rates by altitude, latitude, and solar-flare activity.

2022933425

Source: https://www.industrydocuments.ucsf.edu/docs/jmvl0000

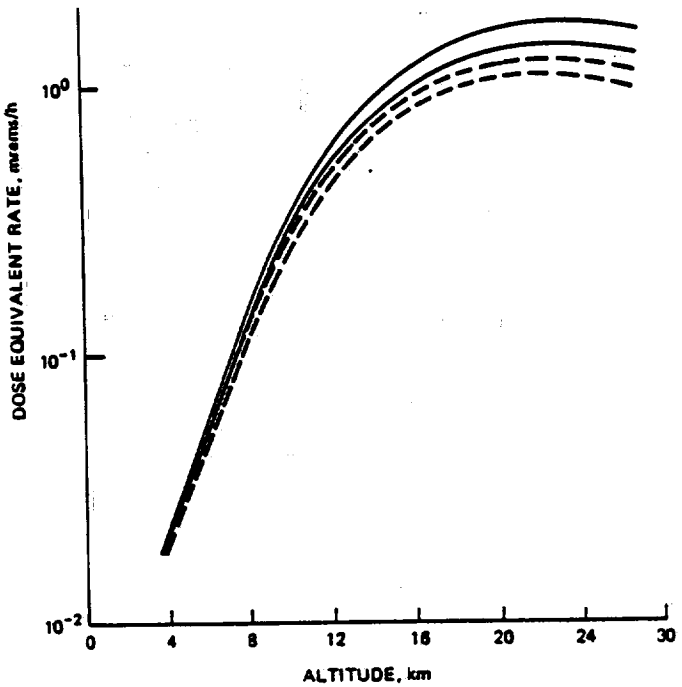

FIGURE 5-4 Total cosmic-ray dose equivalent rate at 5-cm depth in 30-cm slab of tissue at $gamma_m$ = 55 degrees N (———) and 43 degrees N (- - - - -) at solar minimum (upper curve) and solar maximum (lower curve). Quality factors for neutrons as function of energy are included in calculations. Reprinted with permission from National Council on Radiation Protection and Measurements.[109]

EXPOSURE OF PASSENGERS AND CREW

From Figure 5-5, it is relatively easy to estimate the dose equivalent exposure for a particular flight or for an individual. A 5-h trans-Atlantic flight at midlatitude and an altitude of 12 km (39,400 ft) might result in an equivalent whole-body dose of 2.5 mrems. If the same flight goes over the pole during a time of more intense solar activity, the dose equivalent might be 10 mrems. In general, the hourly dose rate at a jet cruising altitude is approximately 100 times the ground-level rate. A person who lived near sea level would have to spend about 200-600 h/yr at cruising altitude to double his or her exposure to cosmic radiation.

2022933426

Source: https://www.industrydocuments.ucsf.edu/docs/jmvl0000

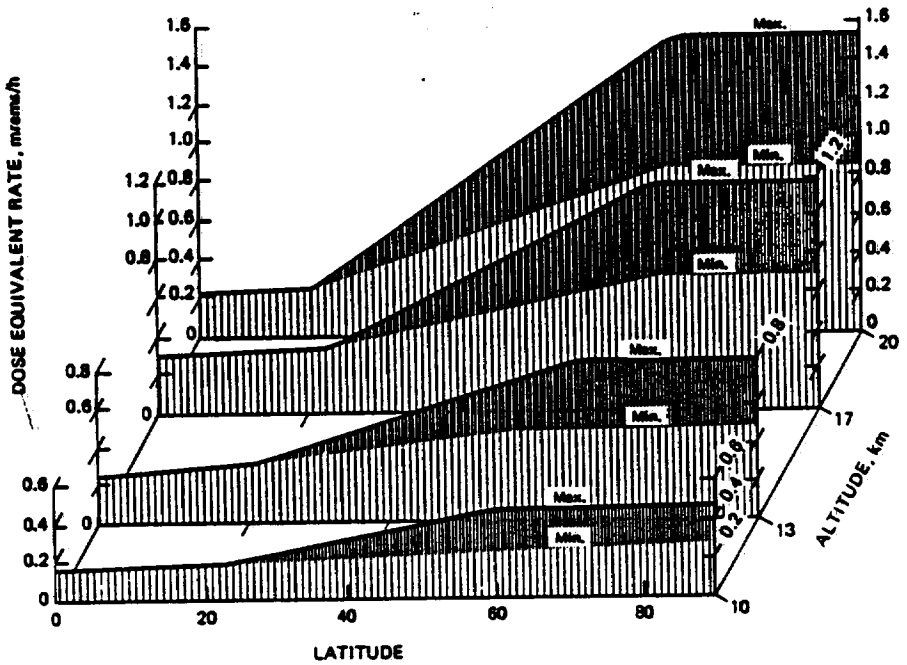

FIGURE 5-5 Best values for maximal and minimal galactic dose equivalent rate as function of latitude and altitude. Reprinted with permission from Baily.[18]

Wallace and Sondhaus[165] calculated the cosmic-radiation exposure to passengers and crew in subsonic commercial travel. The database was for the year 1974 and was limited to domestic and overseas flights longer than 322 km (200 miles). The calculations were made for U.S. residents on the basis of some simplifying assumptions. A complex model was developed according to aircraft type, flight crew and passenger capacities, climb rates, cruise speeds, and flight paths. Matrices were developed for neutron and secondary charged-particle densities according to latitude, altitude, and solar conditions. The Aircraft Radiation Exposure (ACRE) model calculated a flight-dose profile and an accumulated total dose for each one-way flight of each type of aircraft. ACRE generated 1,895 calculated doses. On the basis of the passenger miles flown on each flight segment and the percent and frequency of flying by the American public, the cumulative and average doses to the crew, flying population, and total U.S. population were

2022933427

Source: https://www.industrydocuments.ucsf.edu/docs/jmvl0000

calculated. The summary table from the ACRE paper is reproduced as Table 5-1. The paper reported good agreement between a series of in-flight measurements and calculations. It stated:[168]

> The ACRE average estimate resulting from the detailed air travel data is 160 mrem/year/crew member. This dose is less than the radiation guide limit of 170 mrem/year average additional dose above background recommended for the general public, and it is well below the 500 mrem/year maximum for any individual member of the general public. For occupational exposure of radiation workers, the corresponding limit is 5000 mrem/year.
>
> The values for dose equivalent from commercial flying derived here are 0.47 mrem/person/year when averaged over the total U.S. population and 2.8 mrem/person/year for that segment of the total adult U.S. population that traveled by airline at least once during the year. These compare well with the values of 0.48 mrem/person/year and 3.8 mrem/person/year previously reported [by Schaefer in 1972[130]].

Because substantial changes have occurred in the commercial airline industry over the last decade, it is appropriate to re-evaluate the results cited above, which were based, in part, on Civil Aviation Board (CAB) data from the late 1960s and early 1970s. At that time, about 21-25% of the U.S. population surveyed had flown at least once during a 12-mo period. Other CAB surveys estimated that 66% of passengers traveled less than 1,600 km (1,000 miles), and 89.4% less than 3,200 km (2,000 miles). Since the time of the ACRE calculations and the CAB surveys, several changes have occurred in the U.S. commercial air travel industry. Passenger miles grew rather slowly in the early 1980s, but grew at more than 7%/yr between 1983 and 1985. Projected annual growth is 5% into the mid-1990s. In 1984, there were over 343 million domestic passenger enplanements; Figure 1-1 shows that that is expected to reach 500 million by 1995. Commuter-carrier revenue passenger miles, 3.4 billion in 1984, have been increasing rapidly since deregulation and are expected to triple by 1996.[158]

2022933428

Source: https://www.industrydocuments.ucsf.edu/docs/jmvl0000

TABLE 5-1

Radiation Doses and Air Travel Statistics Based On Program ACRE[a]

	With 100% Occupancy (where applicable)	With 60% Occupancy
Flights per year	2,991,000	
Flights per day	8,194	
Average number of seats per flight	156	
Seats per day	1,281,000	769,000
Seats per year	468,000,000	281,000,000
Flight crew members per year[b]	16,803	
Cabin crew members per year[b]	22,996	
Seat-kilometers per year	581,000,000,000	349,000,000,000
Flight crew-kilometers per year	9,372,000,000	
Cabin crew-kilometers per year	13,000,000,000	
Seat time, h/yr	736,000,000	442,000,000
Flight crew time, h/yr	12,100,000	
Cabin crew time, h/yr	16,600,000	
Total seat dose, man-mrems/yr	164,300,000	98,580,000
Total flight crew dose, man-mrems/yr	2,650,000	
Total cabin crew dose, man-mrems/yr	3,690,000	
Average flight altitude, km	9.47	
Average flight distance,[c] km	1,084	
Average flight time, h	1.41	
Average dose rate, mrems/h	0.20	
Average dose per flight, mrems	0.28	
Average dose per adult passenger,[d] mrems/yr	2.82	
Average dose per flight crew member, mrems/yr	158	
Average dose per cabin crew member, mrems/yr	160	
Average dose to total U.S. population,[e] mrems/person per year	0.47	

[a] Reprinted with permission from Wallace and Sondhaus.[168]

[b] Assuming a limit of 720 h per full-time equivalent crew member at altitude per year, this number of crew members would be required. "Flight crew" refers to flight-deck crew, and "cabin crew" refers to flight attendants. Crew members flying 480 h/yr—instead of 720—would reduce their doses by a factor of 2/3.

[c] According to FAA estimates, the average flight distance is 1,364 km and the median is 933 km.

[d] Average dose to those who flew in the 12 mo of 1973. Of the total adult population of 140×10^6, those who flew in the previous 12 mo were 35×10^6, who shared the 98.6×10^6 man-rems.

[e] The total yearly dose = $(98.6 + 2.65 + 3.69) \times 10^6 = 104.9 \times 10^6$ to passengers, flight deck crew, and cabin crew. This number divided by the total 225×10^6 U.S. population gives 0.47 mrem/yr.

2022933429

Source: https://www.industrydocuments.ucsf.edu/docs/jmvl0000

Aircraft flights are increasing more slowly than passenger miles because of the trend to the use of larger two-engine jet aircraft in service (see Figure 1-3) and the gradual increase in passenger load factors for domestic flights. The international passenger load factor is expected to remain roughly stable over the next 10 yr (see Figure 1-2).

The FAA Aviation Forecasts (1985-1996) indicate a strong recovery in the domestic aviation industry in 1984 and 1985, after a 4-yr period of operating losses. Furthermore, the composition of the aircraft fleet has changed. Planes are being certified to fly up to 14 km (46,000 ft), where the radiation dose rate is about twice that at 10 km (32,800 ft). The jet aircraft fleet will increase primarily with two-engine wide- and narrow-body planes. This will reduce the number of cockpit flight crew members.

The implication of these changes for the expected radiation dose to the crew will depend on changes in work practices. If increased flights and passenger trips result in increased employment by the airlines, the total radiation dose to the crew will increase, even if the dose to the average crew member does not.

Bramlitt[25] pointed out that the calculations of Wallace and Sondhaus probably underestimated crew radiation dose. Cockpit crew are allowed (by FAA regulations) to fly up to 100 h/mo.[48] FAA does not restrict flight-attendant flight time. Some airlines are offering incentives to increase the monthly flight hours of attendants.

Changes in flight altitudes, increases in passenger miles, increases in high-latitude flights, and increases in attendant flight time are expected to increase population and crew radiation exposure. Bramlitt[25 26] argued that these changes render the Wallace and Sondhaus calculations of cosmic radiation exposure of 160 mrems/yr for flight and cabin crew members inappropriate for 1986. Crew and passengers flying more hours at higher latitudes and altitudes can receive substantially more radiation than 160 and 3 mrems/yr, respectively. By 1995, commercial flying might be expected to increase the integrated cosmic-radiation exposure to 1 mrem/person per year when averaged over

2022933430

Source: https://www.industrydocuments.ucsf.edu/docs/jmvl0000

the total U.S. population. The average exposure of the traveling segment of the U.S. population should stay at about 3 mrems/person per year, unless there is a shift to longer and more frequent flights per person.

RADIATION EXPOSURE IN AIRCRAFT AND FROM OTHER NATURAL SOURCES

Natural background constitutes the greatest source of ionizing radiation. The exposure is not uniform; such factors as altitude, geologic features, and living structures result in variations. The U.S. population is receiving genetically significant dose-equivalent radiation from natural background that ranges from 40 to 180 mrems/yr (see Figure 5-6). Oakley[112] calculated the population exposure to cosmic and natural terrestrial radiation for the U.S. population on the basis of 1960 census data. He took into account the geographic distribution of population and the altitude, and he extrapolated the effects of terrestrial radiation from the Atomic Energy Commission-sponsored Aerial Radiological Measurement Surveys conducted from 1958 to 1963. Averaged across the U.S. population, a person receives 44 mrems/yr from cosmic radiation and 40 mrems/yr from terrestrial radiation.

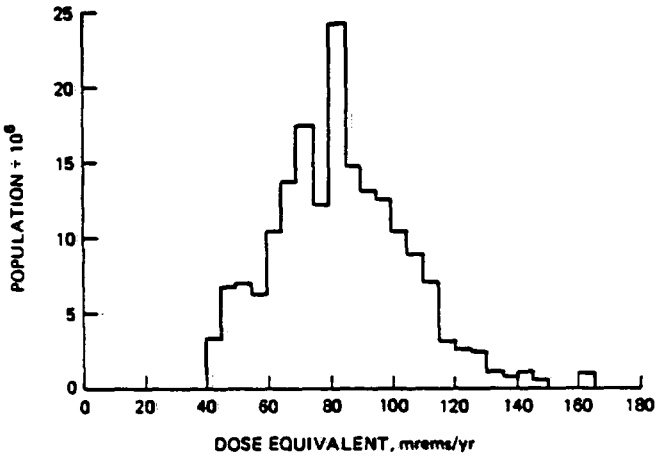

FIGURE 5-6 Population distribution vs. dose equivalent from terrestrial and cosmic radiation. Reprinted from Oakley.[112]

2022933431

Source: https://www.industrydocuments.ucsf.edu/docs/jmvl0000

In the mid-1970s, it was generally recognized that terrestrial radiation might be underestimated.[178] Although structural features, such as homes and other buildings, offer some shielding from cosmic radiation (5-20%), structures can increase exposure to natural radiation by leading to accumulation of radon and its decay products indoors. Single-family residences might have a concentration of radon and radon decay products 10 times that outdoors, or even more.

To calculate radiation doses due to flying, one can assume rates of 0.3-0.4 mrem/h at 36,000 ft (11 km) and 0.6-0.8 mrem/h at 45,000 ft (13.7 km). Thus, a passenger or crew member would have to be at these altitudes for only about 100-300 h to receive a dose of ionizing radiation equivalent to that from natural background in a year at sea level.

GROUPS AT INCREASED RISK OF HEALTH EFFECTS

There are approximately 100,000 commercial-aviation crew members in the United States. In addition, about 28% of the U.S. population flies at least once a year. For the vast majority of airline passengers, the additional equivalent radiation dose from flying is less than 3 mrems/yr. A crew member routinely flying 70-83 h/mo can receive a substantial additional dose. Depending on altitude and latitude of routes flown, a crew member might receive up to 1,000 mrems/yr from flying.

Both the National Council on Radiation Protection and Measurements and the International Commission on Radiological Protection recommend that exposure of the fetus during the entire gestation period from occupational exposures of the expectant mother not exceed 0.5 rem.[68 108]

Stewart and co-workers,[144-146] MacMahon,[95] and MacMahon and Hutchison[96] have determined that fetuses are at high risk. They showed that all types of childhood cancer and leukemia are doubled by even extremely small doses of radiation. More specifically, Stewart and Kneale[144] indicated that 1.5 rads from x rays taken in the latter half of pregnancy doubled the frequency of leukemia in children. However, if x rays were taken

2022933432

Source: https://www.industrydocuments.ucsf.edu/docs/jmvl0000

during the first trimester of pregnancy, only 0.3 rad was needed to double the incidence of cancer in the first 10 yr of life.

Pregnant flight attendants might receive radiation exposure in excess of 500 mrems over the duration of their pregnancy if they fly full-time (70-85 h/mo) on high-altitude flights. Airlines should investigate the policy options for informing female flight attendants about the possible risk involved in flying during pregnancy. In light of the Pregnancy Discrimination Act of 1978,[116] the issues of employees' rights, the rights of fetuses, and airline-industry liability must be addressed in a comprehensive formulation of public and private policy on this matter. Now that the issue of increased radiation exposure among airline employees has been raised by Bramlitt and in this report, FAA and the Environmental Protection Agency, responsible for radiation-protection guidance for occupational exposure, should investigate the in-flight cosmic-radiation exposures of crew members. Of particular concern are increased exposures during solar flares. Bramlitt[25] reported that 5 yr of continuous satellite monitoring by the National Oceanic and Atmospheric Administration had shown an average of seven enhanced solar flares per year; one per year is enough to increase the neutron flux on the ground. The time from detection to maximal activity is 19 h. At 40,000 ft (12.2 km), flares can increase the cosmic-radiation dose rate from 0.7 mrem/h to 200 mrems/h. Rare events can increase the rate to 2,000 mrems/h.

GROUND FUMES

While waiting for a plane to depart or arrive and while sitting in a taxiing plane, passengers can be exposed to substances emitted by aircraft engines and the engines of maintenance vehicles. There is relatively little information on actual exposures in aircraft during these periods, but some information on potential exposure to various substances can be obtained from a review of aircraft engine emission.

Aircraft jet engines emit a variety of potentially toxic substances,[92 93 118 136] including carbon monoxide, oxides of nitrogen, hydrocarbons, aldehydes (especially

2022933433

Source: https://www.industrydocuments.ucsf.edu/docs/jmvl0000

formaldehyde), particles, and polynuclear aromatic compounds. The rate of emission varies with the operation of the aircraft. When idling, engines are less efficient and might emit higher concentrations of some pollutants (e.g., carbon monoxide and hydrocarbons, but not oxides of nitrogen). Aircraft idling and taxiing are major sources of airport air pollution,[92] and idling time is often limited to meet local air pollution criteria.

A study in 1970 evaluated aircraft engine emission as a source of air pollution at Los Angeles International Airport chiefly by monitoring carbon monoxide and particle concentrations in and around the airport.[92] It also included monitoring for carbon monoxide in aircraft on the runway or at the gate. This study demonstrated that carbon monoxide concentrations in the cabin paralleled those outside the aircraft. Cabin concentrations were highest (approximately 10-15 ppm) when the airplane was at the gate loading passengers; that reflected the higher concentrations of carbon monoxide (and particles) in that area of the airport. In general, the study found the highest concentrations of particles and carbon monoxide in or around the airport to be near the passenger terminals, where air and ground traffic was greatest.

Although ground fumes from jet engine exhaust contain substances that can cause respiratory irritation and other health effects, there is little available information from monitoring that indicates the exposure of cabin occupants to these substances.

ENVIRONMENTAL TOBACCO SMOKE

The air contaminant in an aircraft cabin that is most apparent to the passengers and crew is cigarette smoke. Cigarette-smoking contributes to environmental tobacco smoke (ETS) in four ways: it contributes smoke from the smoldering ends of cigarettes (sidestream smoke), smoke that escapes during puff-drawing from the burning cone, vapor that escapes through the paper of the cigarette, and smoke exhaled by smokers. Secondary reactions in these diluted smokes alter their physical and chemical characteristics. ETS is a complex mixture of gases and particles.[161]

2022933434

Source: https://www.industrydocuments.ucsf.edu/docs/jmvl0000

The proportion of passengers who are current cigarette smokers can be estimated from statistics that describe the passenger population (Chapter 1) and the distribution of smokers in the general American population. Some 54% of passengers are male and 46% female;[51] 37% of American males and 29% of females currently smoke.[151] Therefore, the proportion of passengers who currently smoke is (0.37)(0.54) + (0.29)(0.46) = 32.3%. This agrees with the observation that somewhat less than one-third of passengers request seats in the smoking section.

In 1970 and 1971, before establishing smoking restrictions on aircraft, FAA and the U.S. Public Health Service conducted a questionnaire survey of 20 military flights and 14 domestic civilian flights in conjunction with ambient air assessments (described in some detail later in this report).[160] In that study, 31% of the domestic passengers smoked on the flights (an average of 2 cigarettes each), and 52% of the military passengers smoked on the flights (an average of 8 cigarettes each). In 1961, Halfpenny and Starrett[58] found that smokers average 1.25 cigarettes/h on 2-h flights and that 51% of passengers smoke on aircraft. Both these studies were conducted before the smoking restrictions on aircraft. The current estimates of smoking rates are 2.1 and 2.2 cigarettes/h.[32 148] The above numbers are estimated averages, and the actual smoking rates on aircraft are highly variable, as illustrated in Figure 5-7.

Some aspects of cigarette-smoking on airplanes are peculiar to that situation. In public places generally, it might be expected to find one person in nine smoking at any given time. However, on aircraft, smokers are seated together, and smoking might be heaviest after the "no smoking" light is turned off and after a meal is consumed. This pattern of smoking results in higher transient concentrations of cigarette smoke than occur in other public places where smoking is permitted. High transient concentrations occur not only in the smoking section, but also in other parts of the cabin.

2022933435

Source: https://www.industrydocuments.ucsf.edu/docs/jmvl0000

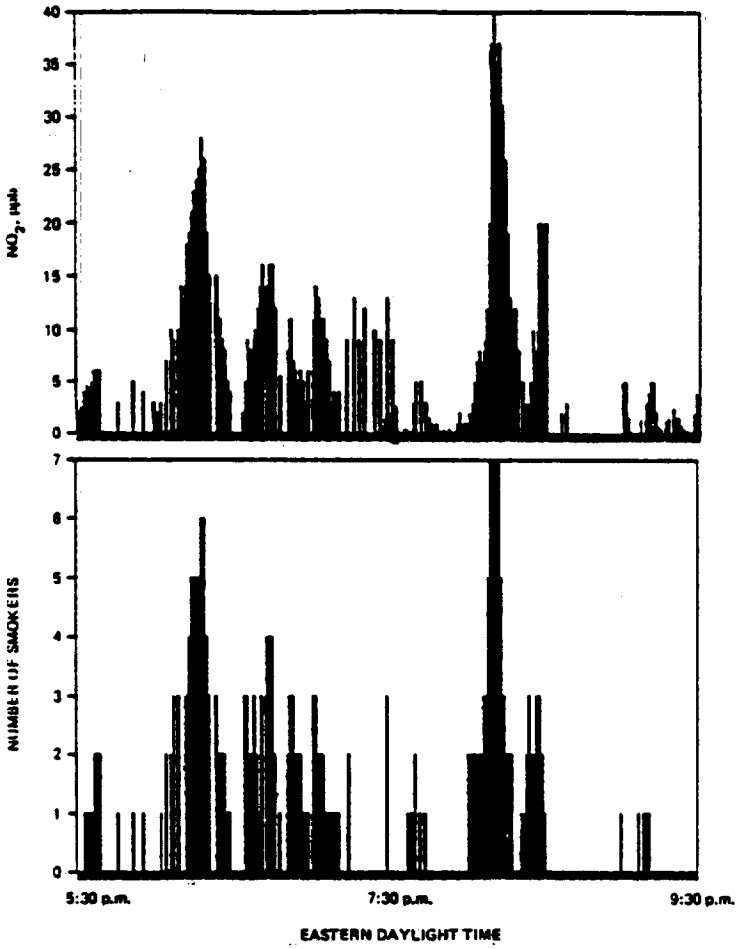

Figure 5-7 Top, NO_2 concentration vs. time during flight from Boston to Denver. Bottom, number of cigarettes smokers on same flight. NO_2 measured approximately once a minute; smokers (passengers with lighted cigarettes) counted approximately 15 s after NO_2 measurement. Data from D. H. Stedman (personal communication, 1985).

AIRCRAFT VENTILATION AND SMOKE CONCENTRATIONS

Table 5-2 is a partial list of compounds in cigarette smoke. Many of these are more heavily concentrated in the sidestream. The sidestream-mainstream ratios presented in the table were measured under standardized laboratory conditions. In the cabin

2022933436

Source: https://www.industrydocuments.ucsf.edu/docs/jmvl0000

air, the relationship among the constituents in ETS varies with the brand of cigarette, smoking behavior, and environmental conditions (e.g., humidity and air mixing). Many of the chemical components of ETS are known to be toxic (e.g., acrolein and carbon monoxide) or carcinogenic (e.g., N-nitrosodiethylamine and benzo[a]pyrene) in humans or animals.

As discussed in Chapter 7, measurements of carbon monoxide, nitrogen oxides, respirable suspended particles (RSP), and light-scattering are all used as surrogates to detect ETS. It is reasonable to assume that the harmful components are proportional to the measured gas phase and particle phase of ETS.

If cigarette-smoking on aircraft were at a constant rate, a steady-state concentration of smoke would be achieved after 5-10 min under typical ventilation rates—about twice the typical air exchange time (see Chapter 2). On aircraft without recirculated air, the steady-state density will be approximately proportional to the product of the rate of smoke production and inversely proportional to the flow of outside air.

Other factors also affect ETS concentrations, such as deposition on surfaces, especially fabrics. Under normal conditions, the rate of chemical and physical removal in the cabin is much less than the rate of removal by ventilation. The ETS concentration can be decreased by decreasing the source (i.e., the number of cigarettes smoked) or by increasing the rate of flow of outside air (i.e., decreasing the air-exchange time). Decreasing the size of the smoking section might increase the concentration of ETS in that section, if the same number of smokers are concentrated in fewer seats.

The above relationships neglect the recirculation patterns common on modern aircraft. In most aircraft, there is no physical barrier between the smoking and nonsmoking sections. Consequently, there will be some mixing between sections. In some wide-body jets, air is recirculated to the zone from which it is taken. In this design, if a zone is designated smoking or nonsmoking, recirculation should not affect mixing in other areas of the aircraft. Recirculation patterns in which air is mixed throughout the whole aircraft distribute gaseous smoke products and submicrometer particles throughout

2022933437

Source: https://www.industrydocuments.ucsf.edu/docs/jmvl0000

the aircraft. The filter systems described in Chapter 2 should be adequate to remove micrometer-sized particles and a portion of the submicrometer smoke particles. However, ETS vapors would not be removed. Furthermore, if the optional charcoal absorption beds are installed and maintained, gaseous contamination will be substantially reduced. However, efficiency of charcoal absorption varies with compounds, water vapor, flow rate, and time. These complexities could be taken into account in the model described in Appendix A.

TABLE 5-2

Distribution of Compounds in Nonfilter-Cigarette Undiluted Mainstream and Diluted Sidestream Smoke[a]

Compound	Total Emission in Mainstream Smoke, μg/cigarette	Sidestream-to-Mainstream Total Emission Ratio
Vapor phase:		
Carbon monoxide	10,000-23,000	2.5:1-4.7:1
Carbon dioxide	20,000-40,000	8:1-11:1
Carbonyl sulfide	18-42	0.03:1-0.13:1
Benzene	12-48	10:1
Toluene	160	6:1
Formaldehyde	70-100	0.1:1-50:1
Acrolein	60-100	8:1-15:1
Acetone	100-250	2:1-5:1
Pyridine	16-40	6.5:1-20:1
3-Methylpyridine	12-36	3:1-13:1
3-Vinylpyridine	11-30	20:1-40:1
Hydrogen cyanide	400-500	0.1:1-0.25:1
Hydrazine	0.032	3:1
Ammonia	50-130	40:1-170:1
Methylamine	11.5-28.7	4.2:1-6.4:1
Dimethylamine	7.8-10	3.7:1-5.1:1
Nitrogen oxide	100-600	4:1-10:1
N-Nitrosodimethylamine	0.01-0.04	20:1-100:1
N-Nitrosopyrrolidine	0.006-0.03	6:1-30:1
Formic acid	210-490	1.4:1-1.6:1
Acetic acid	330-810	1.9:1-3.6:1

2022933438

Source: https://www.industrydocuments.ucsf.edu/docs/jmvl0000

TABLE 5-2 (continued)

Compound	Total Emission in Mainstream Smoke, µg/cigarette	Sidestream-to-Mainstream Total Emission Ratio
Particulate phase:		
Particulate matter	15,000–40,000	1.3:1–1.9:1
Nicotine	1,000–2,500	2.6:1–3.3:1
Anatabine	2–20	<0.1:1–0.5:1
Phenol	60–140	1.6:1–3.0:1
Catechol	100–360	0.6:1–0.9:1
Hydroquinone	110–300	0.7:1–0.9:1
Aniline	0.36	30:1
2-Toluidine	0.16	19:1
2-Naphthylamine	0.0017	30:1
4-Aminobiphenyl	0.0046	31:1
Benz[a]anthracene	0.02–0.07	2:1–4:1
Benzo[a]pyrene	0.02–0.04	2.5:1–3.5:1
Cholesterol	22	0.9:1
γ-Butyrolactone	10–22	3.6:1–5.0:1
Quinoline	0.5–2	8:1–11:1
Harman	1.7–3.1	0.7:1–1.7:1
N'-Nitrosonornicotine	0.2–3	0.5:1–3:1
NNK[b]	0.1–1	1:1–4:1
N-Nitrosodiethanolamine	0.02–0.07	1.2:1
Cadmium	0.1	7.2:1
Nickel	0.02–0.08	13:1–30:1
Zinc	0.06	6.7:1
Polonium-210	0.04–0.1 pCi	1.0:1–4.0:1
Benzoic acid	14–28	0.67:1–0.95:1
Lactic acid	63–174	0.5:1–0.7:1
Glycolin acid	37–126	0.6:1–0.95:1
Succinic acid	110–140	0.43:1–0.62:1

[a] Total emissions are given for fresh, undiluted mainstream smoke generated by a smoking machine under conditions of 1 puff/min of 2-s duration and 35-ml volume, i.e. 10 puffs/cigarette. Sidestream values are given for smoke collected with an airflow of 25 ml/s, which is passed over the burning cone. Compiled by D. Hoffmann (personal communication, 1986) from Elliott and Rowe,[45] Hoffmann et al.,[64] Klus and Kuhn,[78] Sakuma et al.,[124–126] and Schmeltz et al.[134]

[b] 4-(N-Methyl-N-nitrosamino)-1-(3-pyridyl)-1-butanone.

2022933439

Source: https://www.industrydocuments.ucsf.edu/docs/jmvl0000

CONCENTRATIONS OF ETS CONSTITUENTS MEASURED ON AIRCRAFT

Aircraft air quality has not been a subject of systematic investigation by independent researchers. Various airlines have conducted their own studies of airborne contaminants. Several airlines—such as Air France,[164] United Airlines,[8] and Lufthansa German Airlines[94]—have conducted tests, and some Committee members have conducted a few "measurements of opportunity." That is, the measurements have not been conducted under experimental situations or have not been conducted systematically for a variety of aircraft. As discussed in Chapter 7, isolated measurements are likely to be highly variable, even if made with accurate instruments.

The distribution of smoke in the aircraft cabin is not uniform, but rather exhibits spatial and temporal variability. The concentration measured in any area would depend on location of the sampler in relation to the smoke source and the ventilation in that area.

In 1970 and 1971, in one of the earliest studies, FAA and the U.S. Public Health Service[160] measured carbon monoxide, aromatic hydrocarbons, aldehydes, ketones, and total particulate mass on 20 military flights and 14 domestic civilian flights. These studies were done before smokers were segregated in the aircraft cabin, so their relevance to present conditions is not clear.

Data from more recent studies are listed in Table 5-3. Lufthansa[94] provided material that contained useful information about relative humidity; however, because the instruments used for measuring contaminants had limits of detection above the expected values, these data are not included in the table.

Members of the Committee have used portable instruments to measure ETS concentrations on commercial flights. These measurements were not accompanied by detailed documentation of ventilation or numbers of people smoking. They are included here only to illustrate further the concentrations that could be encountered on aircraft. A hand-held nephelometer (see DC-10 flight data from Spengler in Figure 5-3) and piezoelectric balance (see B-747 flight data) were used to measure mass concentration of suspended particulate

2022933440

Source: https://www.industrydocuments.ucsf.edu/docs/jmvl0000

TABLE 5-3

Examples of Measurements of Pollutants on Airliners

Source of Measurement	Aircraft	Constituent Measured	Concentration
D. H. Stedman (personal communication, 1985)	B-727-200	NO_2	0-40 ppb
FAA and USPHS[160]	Several, 1970-1971	CO RSP	Max., 5 ppm Avg., 140 $\mu g/m^3$; peak, 1,200 $\mu g/m^3$
United Airlines[8]	B-747	CO RSP	Max., 3 ppm 60-320 $\mu g/m^3$
	DC-10	CO RSP	Max., 5 ppm 19-400 $\mu g/m^3$
	DC-8-61	CO RSP	Max., 5 ppm 70-260 $\mu g/m^3$
	B-727	CO RSP	Max., 5 ppm 40-140 $\mu g/m^3$
	B-737	CO RSP	Max., 5 ppm 80-200 $\mu g/m^3$
Air France[164]	B-747	CO	Max., 5 ppm
J. Spengler (personal communication, 1986)	B-747	RSP	10-50 $\mu g/m^3$ nonsmoking
		RSP	50-500 $\mu g/m^3$ in smoking section; peak, 1,000 $\mu g/m^3$
	DC-10[a]	RSP	10-40 $\mu g/m^3$ in nonsmoking aft cabin with no cigarette odor
		RSP	100±20 $\mu g/m^3$ in nonsmoking forward cabin with cigarette odor
		RSP	300±200 $\mu g/m^3$ in smoking section; peak, 750 $\mu g/m^3$
		CO_2	550-1,200 ppm

[a] Load factor, 40-60%.

2022933441

Source: https://www.industrydocuments.ucsf.edu/docs/jmvl0000

matter. The nephelometer responds optimally to particles in the submicrometer range. The RSP concentrations were about 10-50 μg/m^3 in the two-thirds-filled nonsmoking section of a wide-body airliner, about 100 μg/m^3 at the front of the smoking section, and over 500 μg/m^3 in the rear of the smoking section near the lavatories. Occasional readings exceeded 1,000 μg/m^3. Similar concentrations were recorded on a DC-10 over six segments of a round-trip flight between Boston and Anchorage. Load factors were between 40 and 60%.

STANDARDS FOR OTHER ENVIRONMENTS

There are no federal standards for ETS in any environment, although smoking has been prohibited in many public buildings by municipal and state ordinances. The occupational and ambient standards for carbon monoxide and particulate matter that are often applied to ETS do not take into account the other toxic materials present in ETS, which contains measurable concentrations of several known carcinogens and cocarcinogens.

The national ambient air quality standards for carbon monoxide and total suspended particles (TSP) are shown in Table I-1 (in the introduction). An additional indoor air standard for particle density in office buildings is the Japanese standard of 150 μg/m^3.[9] For carbon monoxide, the EPA and ASHRAE standards of total 1-h concentration of 35 ppm and 8-h concentration of 9 ppm appear unlikely to be violated in typical airliner cabins. However, the TSP standard is a particle-mass standard designed mainly for protection from pollutants like fly-ash, and not designed to take into account the toxicity or size distribution of ETS. The TSP standards (150-260 μg/m^3 for 24 h) also do not take account of particle size. That is, the TSP standard deals with only total mass, which usually is dominated by larger particles of a size that ordinarily cannot enter the lungs during breathing. However, respirable particles have little mass. A standard that would be specific to RSP is likely to be considerably lower than a comparable TSP standard, because RSP contributes little to the TSP mass. Because aircraft cabin RSP concentrations of 250 μg/m^3 are not unusual, it is apparent that a majority of the air quality measurements given in Table 5-3 would violate the Japanese standard for particle density and,

2022933442

Source: https://www.industrydocuments.ucsf.edu/docs/jmvl0000

in many cases, the less stringent EPA 24-h standard for TSP.

Ventilation standards for smoking areas in other public places are designed to produce acceptable air in which there are no known contaminants at harmful concentrations and with which a substantial majority (80%) of the occupants do not express dissatisfaction. These standards led to the ASHRAE suggestion of ventilation at 20-50 cfm/person for a variety of settings where smoking is allowed.[4] The maximal flow ventilation distribution in 1985, shown in Figure 2-6, indicates that about 80% of the flights had airflow of less than 40 cfm/passenger. By the above guidelines, it is apparent that aircraft ventilation would not meet the criterion of acceptability to at least 80% of nonsmokers if the nonsmokers were forced to work in, traverse, or wait in an active smoking section.

EXPOSURE TO ETS ON AIRLINERS

According to a National Research Council report (see National Research Council, Committee on Indoor Pollutants,[110] p. 8), "public policy should clearly articulate that involuntary exposure to tobacco smoke has adverse health effects and ought to be minimized or avoided where possible." Several different groups of people are characterized by different kinds of exposure to ETS.

On commercial aircraft, the people with the greatest exposure are the cabin crew, who are exposed to ETS regularly. In some aircraft, the galley is in the smoking section, so cabin crew are exposed to ETS at the same concentrations and for the same durations as passengers in the smoking section. Thus, cabin crew, including pregnant flight attendants, are likely to be exposed to ETS at high concentrations. Although policies vary among airlines, some attendants are permitted to fly (with their doctors' permission) up to the twenty-eighth week of pregnancy.

Passengers will not be exposed daily. However, nonsmoking passengers in the smoking section, such as spouses and children, will be exposed to the ETS. Passengers in the few nonsmoking rows adjacent to the

2022933443

Source: https://www.industrydocuments.ucsf.edu/docs/jmvl0000

smoking section are likely to be exposed to the next highest transient concentrations, because of air motion and ETS diffusion from the smoking section. In aircraft without air recirculation, passengers well into the nonsmoking sections, flight crew members, and cabin crew members whose duties do not take them into the smoking sections are relatively unexposed.

The nature of exposure to ETS and its composition is complicated by the fact that all aircraft now in production have some form of recirculation system. The complexity arises because of differences in ventilation equipment between aircraft and differences in operating procedures that change the proportion of outside to recirculated air. In addition, there is usually a filter that removes some particulate matter; however, the passage of gases through the filter is usually unimpeded. Thus, the composition of ETS after it passes through filters has not been characterized for the full range of filters that might be found on an airplane. Cain et al.[33] demonstrated in chamber studies that nonsmokers report dissatisfaction with and irritation by cigarette-generated smoke, even when the smoke is filtered with an electrostatic precipitator. This was true when smoke concentrations were low, as determined by measurement of surrogate carbon monoxide concentrations at 5 ppm and even as low as 1 ppm. Filtration of 80% of particles with Cambridge filters, which are currently in use on aircraft that have recirculation systems, has reduced irritation substantially[111 168] (see Chapter 2).

HEALTH EFFECTS IN AIRPLANES

The irritant properties of cigarette smoke have given rise to complaints about the quality of aircraft environments. Irritation affects general health and welfare and thus affects performance of the crew. Records of passenger or flight attendant complaints compiled by the Association of Flight Attendants[15] listed "smoky" as a complaint in 73 of 297 air quality complaints; the cause was listed in only 113 of the 297 cases. In a 1980 questionnaire study of 1,961 Scandinavian Airlines System (SAS) cabin attendants, only 4% were not at all bothered by smoky air, whereas 69% were "bothered to a great extent." The data are shown in Table 5-4.

2022933444

Source: https://www.industrydocuments.ucsf.edu/docs/jmvl0000

TABLE 5-4

Results of 1980 Questionnaire Survey of SAS Cabin Attendants[a]

Subject of Complaint	Attendants Bothered by Factors Listed Below, %		
	Not at All	To a Certain Extent	To a Great Extent
Noise	13	53	34
Cold	29	56	15
Cabin temperature variation	32	55	13
Heat	43	49	8
Variation in cabin pressure	36	51	13
Drafts	27	47	26
Static electricity	44	45	11
Dry air	10	31	59
Turbulence	22	60	17
Dust	62	31	7
Smoky air	4	26	69
Odors	26	61	13
Pungent smells	59	34	7

[a] Data from Ostberg and Mills-Orring.[113]

In one study of six nonsmoking flight attendants, increases in blood nicotine and urinary cotinine (a nicotine metabolite) were observed after flights of 8 h.[49] However, Duncan and Greaney[44] found no increase in carbon monoxide in exhaled breath of 16 flight attendants after 10 h of flying (Los Angeles to Honolulu and back).

HEALTH EFFECTS IN OTHER ENVIRONMENTS

Given the limited number of studies of exposure to ETS in aircraft, evidence of adverse health effects necessarily is inferred from studies in other environments. These include studies of chronic exposure, relevant to the cabin crew, and studies of acute effects of exposure, relevant to the passengers.

2022933445

Source: https://www.industrydocuments.ucsf.edu/docs/jmvl0000

The possible health effects of ETS on nonsmokers cannot simply be extrapolated from the health experience of active smokers, for the following reasons. First, smokers and nonsmokers differ in exposure and deposition of smoke particles in the lung.[60] Particles in mainstream smoke (which the smoker takes in from the cigarette) become much larger than those in sidestream smoke, because they are more highly concentrated and agglomerate in the respiratory tract. Because of lung aerodynamics, larger particles (≥ 1 µm) tend to be deposited in the bronchus, whereas smaller particles (<1 µm) can be carried deeper into the lung and deposited in the smaller tubules and alveolar sacs.[69] The extent to which ETS particles are hygroscopic and increase in size will affect the deposition pattern. However, 89% of the inhaled sidestream smoke particles are exhaled.[61] The membranes of various regions of the lung differ substantially, e.g., in thickness and presence of cilia. Second, the deposition of smoke particles in the lung is also affected by the breathing patterns of the individual; some smokers inhale smoke more deeply than nonsmokers. The 1982 EPA report on particles and sulfur oxides[154] discusses deposition of particles for nose breathing, compared with mouth breathing. The deposition curve peak shifts downward from 3.5- to about 2.5-µm diameters. The peak is much less pronounced (about 25%, compared with 50% for mouth breathing), with a nearly constant pulmonary deposition of about 20% for all sizes between 0.1 and 4 µm.

In a 1985 Gallup poll,[3] over 85% of nonsmokers and 60% of smokers felt that smoking should be restricted in the workplace and that, in the presence of nonsmokers, smokers should curtail their smoking. Speer[140] interviewed nonallergic people regarding their subjective reactions to cigarette smoke. They reported eye irritation, headaches, nasal symptoms, and coughing. Unacceptable odor is often the first complaint of people exposed to ETS. Nonsmokers are more likely to find ETS odor unacceptable than smokers.[32] Cain et al.[32] systematically varied environmental conditions—including temperature, humidity, and ventilation rates—to determine the intensity of ETS-associated odor for visitors to and occupants of an experimental chamber. They found that odor sensitivity to ETS increased as relative humidity was increased from 50% to 75%. Tobacco smoke odor does not decay rapidly.[36]

2022933446

Source: https://www.industrydocuments.ucsf.edu/docs/jmvl0000

The odor characteristics of ETS in the airliner cabin need to be studied, to determine how low humidity and other environmental conditions affect discomfort of these types. Cain et al.[32] determined that, with as few as 10% of the occupants in a space smoking at any time, a ventilation rate of 5.3 cfm/occupant was required to make the air acceptable to at least 80% of the occupants, especially nonsmokers, who are more sensitive to the odor than smokers.[32] Kerka and Humphreys[77] demonstrated that, although perceived tobacco smoke odor is reduced over time owing to olfactory adaptation while the person stays in the chamber, the degree of sensory irritation increases. Both odor and irritation are perceived to be more intense at lower humidities (30% vs. 65%) (Figure 5-8). The Committee could find no information on studies done at relative humidities below 10%, which are typical of aircraft. The eye is the most readily affected site of irritation. Weber and colleagues have studied the effects of ETS on the eyes extensively.[168-172] There are no data on the combined effects of ETS, low humidity, and photochemical oxidants (including ozone, formaldehyde, and acrolein) on the eye; contact-lens wearers in particular should be studied in this environment.

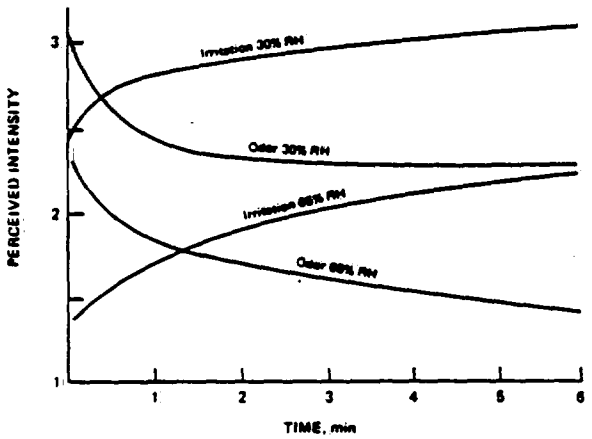

Figure 5-8 Relationship of relative humidity to odor and irritation during continuous short-term exposure to cigarette smoke generated in a chamber. Ventilation, 14 cfm/cigarette; ambient temperature, 25°C. Adapted from Kerka and Humphreys.[77]

2022933447

Source: https://www.industrydocuments.ucsf.edu/docs/jmvl0000

Other health effects of ETS have been studied in chronically-exposed nonsmokers compared with unexposed nonsmokers. Chronic exposure studies are more relevant to flight attendants who are chronically exposed occupationally than to passengers who are not otherwise chronically exposed. Extrapolation from these studies to the experience of persons in an aircraft cabin is not straightforward, but the studies do indicate the range of possible health effects to consider.

There have been several studies of lung cancer risk in nonsmoking spouses of smokers. In 1981, studies in Japan[62 63] and Greece[150] showed that women with smoking husbands had a statistically significantly higher risk of lung cancer than other women and that the risk increased with the number of cigarettes that their husbands smoked. Since then, several investigators have examined this association with case-control and prospective studies.[35 41 52 55 62 63 76 80 82 127-129 150 177] Because of sample sizes, most of the observed differences are not statistically significant. However, of the 15 studies that separated nonsmokers from smokers, most found an increase in risk associated with chronic exposure to ETS. A positive association of lung cancer with ETS exposure is biologically plausible (ETS does contain toxic and carcinogenic chemicals), and results are consistent between studies and across study designs and cultural settings. Therefore, the Committee concludes that there is a positive association between lung cancer and chronic exposure to ETS. Exposure values in these studies were developed from questionnaire data that indicated that the nonsmoking subjects were chronically and regularly exposed to ETS at home. The Committee on Passive Smoking of the National Research Council is currently reviewing the available published literature on the health risks associated with ETS exposure and will prepare a report.

To evaluate the relevance of occupational exposures to ETS for the cabin crew in aircraft, we assumed that a flight attendant worked 800 h/yr in the smoking section of an airplane, where the average concentration of total particles might be 250 $\mu g/m^3$. Assuming a breathing rate consistent with modest exercise--i.e., 15 L/min--under these circumstances the integrated exposure to ETS would be 1.8×10^5 $\mu g/yr$. Spengler et al.[142] reported that a home with a 1-pack/d smoker is likely to have

2022933448

Source: https://www.industrydocuments.ucsf.edu/docs/jmvl0000

particle concentrations at least 20 $\mu g/m^3$ higher than a home without smokers. But if a nonsmoker lives with a 1.5-pack/d smoker, sharing approximately 70% of his or her time at home and breathing at a resting rate of 10 L/min, the nonsmoker would have an integrated exposure of 1.1×10^5 $\mu g/yr$. Thus, it is likely that a flight attendant working full-time is receiving an integrated exposure to ETS approximately equal to that associated with living with a 1.0-pack/d smoker.

Most studies of the effects of ETS on the lung of adults have investigated pulmonary function changes that might indicate early disease. Many studies of chronic exposure of children indicate that the prevalences of respiratory symptoms and illness are increased and pulmonary function can be decreased.[161] However, there have been relatively few studies in adults. White and Froeb[174] reported that nonsmoking healthy adults exposed to tobacco smoke at work had lower forced expiratory flow rates than nonsmokers not so exposed. However, these results have been questioned by several investigators.[1 16 67 87] Kentner et al.,[76] in another study of the effect of smoking in the work environment, found no significant change in the results of any pulmonary function test among working adults. There have been a number of studies of changes in pulmonary function of adults in relation to exposure to smoke in the home environment. Comstock et al.[39] and Brunekreef et al.[29] detected decreases in pulmonary function, although the decreases were insignificant. Kauffmann et al.,[74 75] in two studies, detected significant decreases in standardized forced expiratory volume, especially in women over age 40. Thus, it is difficult to draw any firm conclusion on the use of forced expiratory rates in determining health effects of ETS. It is unclear whether the investigators were treating the observed changes in pulmonary function as representative of a health effect of long or short exposure to ETS and whether the changes were symptomatic of pulmonary disease. There were no assessments of ambient conditions or biochemical measures of components of tobacco smoke in most studies. Therefore, it is difficult to extrapolate the results of these studies to potential health effects in passengers and crew members in airliner cabins. Some chemicals in tobacco smoke, however, are known to cause mucociliary stasis, toxicity to alveolar macrophages, increased permeability of the mucosal barrier, and changes in immunoglobulins.[38 47]

2022933449

Source: https://www.industrydocuments.ucsf.edu/docs/jmvl0000

There are few data on the potential effects of ETS on cardiovascular disease. Investigations have centered on carbon monoxide and nicotine, because of their known effects on the oxygen-carrying capacity of blood and on the sympathoadrenal system.[162] A recent comprehensive review of laboratory and clinical data on animals and humans with respect to nicotine and carbon monoxide uptake in passive smoking and its potential effect on the cardiovascular system[133] concluded that passive smoking should have no cardiovascular effects in humans. However, the reports of cardiovascular complications in previously normal people exposed to ETS raise the possibility of deleterious effects associated with exposure.[53 55 62 63]

In summary, the cabin crew are chronically exposed to substantial ETS concentrations. The total exposures might approach those experienced by spouses of smokers. Therefore, the health effects assessed in spouses of smokers could be relevant for the cabin crew. The cabin crew and asymptomatic passengers are subject to acute health effects of exposure to ETS. Furthermore, given the low relative humidity and other environmental conditions of the cabin, such as high ozone concentration, the irritation and discomfort effects are likely to be important for occupants of the smoking and nearby sections and to others who need to move through the smoking section.

GROUPS AT INCREASED RISK

Other persons who might have a different risk of exposure to ETS on aircraft are passengers with pulmonary or cardiovascular diseases. Dahms et al.[42] found that asthmatic patients had a significant linear decrease in pulmonary function after exposure to ETS, with reductions in forced expiratory volume, forced expiratory flow, and forced vital capacity. The etiology of these changes has not been defined clearly, although some suggest that the smoke might increase airway resistance in patients with bronchial asthma, whose pulmonary function was already lower than that of normal subjects. Wiedemann et al.[176] also studied asthmatics. However, his patients were not on medication and had normal or nearly normal lung function. After their exposure to ETS, they found a significant decrease

2022933450

Source: https://www.industrydocuments.ucsf.edu/docs/jmvl0000

in airway reactivity, as assessed by a methylcholine challenge test. Shephard et al.,[137] however, found decreases in pulmonary function among medicated asthmatic patients when they were exposed to ETS, but the changes were not significant.

It has been suggested but never proved, that patients with angina are at increased risk of recurrence in the presence of ETS. Aronow et al.[11 14] reported an exposure-related subjective outcome, angina, in persons with severely compromised cardiovascular systems—patients who had previously suffered from angina pectoris. Similar findings of early-onset angina were observed when patients were exposed to carbon monoxide at concentrations characteristic of those noted during the ETS exposure experiments.[10 12 13] The validity of these findings has been questioned,[155] and the studies are currently being repeated by both the National Institute of Environmental Health Studies and the Health Effects Institute.

Other groups that might be at increased risk due to exposure to ETS are people with various chronic pulmonary diseases, including chronic obstructive pulmonary disease, emphysema, alpha-1-antitrypsin deficiency, and cystic fibrosis. However, the effects of ETS on these people have not been studied.

PREVENTION OF EXPOSURE TO ETS

Occupational exposure of flight attendants to ETS could be limited by configuring aircraft without any work stations (galleys) in the smoking section. Exposure of nonsmoking passengers would be lessened if access to lavatories did not require passage through the smoking section. Total isolation of smokers and their air is possible, but would be a major engineering task whose cost would presumably be borne by the flying public through higher ticket costs.

Light-weight, high-performance, economical filter systems that effectively remove gases and particles from ETS could eliminate many of the problems of and objections to onboard smoking. Such systems that are compatible with requirements for installation on airplanes have not yet been developed.

2022933451

Source: https://www.industrydocuments.ucsf.edu/docs/jmvl0000

The ultimate prevention of exposure will be achieved only when there is no smoking on aircraft. However, it has been argued that the acute withdrawal from compounds in tobacco smoke would be accompanied by symptoms that are both physical and psychologic in origin and that heavy smokers might find it difficult to endure the stress of long airplane flights without smoking. Murray and Lawrence[106] have described the state of knowledge regarding withdrawal symptoms. The weight of evidence does not support the view that unpleasant physical and psychologic effects necessarily follow abstinence from smoking. Weight gain, craving for cigarettes, etc., are highly idiosyncratic and do not occur with high frequency in smokers who are temporarily required to cease smoking. Those who suffer withdrawal symptoms should discuss with a doctor the use of nicotine substitutes to alleviate the discomfort.

The Civil Aeronautics Board (CAB) suggested in 1981, and later withdrew, a ban on smoking on flights lasting less than 2 h.[153] The ban was withdrawn because

> it would be particularly troublesome on multisegment flights where smoking would be permitted at some times, and then prohibited during other parts of the trip. In addition, such a ban would require arbitrary line drawing. It might create a perverse incentive for some carriers to rearrange their schedules to evade it. We conclude on balance that the limited benefits are outweighed by the difficulties associated with the proposal.

In the judgment of the Committee, the potential health effects of passive smoking are of more concern than effects of withdrawal, and more people are at risk. We believe that CAB's suggested 2-h limit did not provide adequate protection to passengers on longer flights. Therefore, the ban on smoking should be extended to all domestic flights. Limiting the ban on smoking to domestic flights would allow smokers the option of taking planes with stopovers that would enable them to smoke in smoking areas of the airport. The use of nicotine substitutes could discourage surreptitious smoking, as could strict enforcement of no-smoking rules with the threat of fines. The hazard of in-flight fires resulting from surreptitious smoking in lavatories can be reduced through the use of nonremovable smoke detectors.

2022933452

Source: https://www.industrydocuments.ucsf.edu/docs/jmvl0000

After a period of adjustment and with strict enforcement, prohibiting smoking should reduce onboard fire risk, cleaning costs, and costs of replacing and repairing damaged materials. Removing tobacco smoke from the aircraft environment would reduce cabin ventilation requirements, and that would result in additional fuel savings while reducing irritation and health risk.

SUMMARY

The concentration of ETS is directly proportional to the strength of the source (number of active smokers) and inversely proportional to the flow of outside air in a smoking area. Recirculation in various configurations complicates the distribution, but does not fundamentally change the relationship between smoke generation and the steady state of the total mass of contaminants in the cabin. Currently available filters on airplanes only remove particles. Some particles and tars are removed through settling and adsorption onto cabin surfaces.

Carbon monoxide and respirable particulate matter are measured as surrogates for ETS, which is a complex mixture of many components. Peak concentrations of carbon monoxide and RSP of about 5 ppm and 500 $\mu g/m^3$, respectively, are to be expected and have been measured. However, the data supporting these values are sparse, and most have not been subjected to peer review.

The measured values do not violate U.S. ambient or workplace carbon monoxide standards, but do violate a Japanese standard for indoor air quality. Cigarette smoke contains known human and animal carcinogens that would be strictly regulated if the source were something other than tobacco. Ventilation standards that have been set to avoid irritation by ETS in buildings are not met by standard aircraft practices.

The most regularly exposed nonsmoking populations are cabin crew members whose duties require them to spend long periods in the smoking section and passengers who are seated in or near the smoking section.

Health-effects data from other environments do not permit us to present reliable quantitative risk estimates related to the health impact of present concentrations of

2022933453

Source: https://www.industrydocuments.ucsf.edu/docs/jmvl0000

ETS on exposed nonsmokers in an aircraft environment. One report that presented a risk-assessment calculation for ETS suggested that a reduction by more than a factor of 10 in present aircraft concentrations would be necessary to bring the risk calculated in that report into the range permitted for regulated toxic environmental contaminants. This degree of change, which might be technologically possible, is likely to be economically unrealistic if smoking were permitted in aircraft.

Patients with severe asthma or angina are at higher risk from exposure to ETS than other exposed people, because of the increased likelihood of acute symptoms.

The Committee considered several ways of reducing ETS in aircraft. Solutions requiring structural or engineering changes—such as increasing ventilation, moving lavatories and galleys, and separating smoking compartments by physical barriers—are not likely to be economically feasible. Increasing ventilation for the smoking zone to be in compliance with ASHRAE guidelines is not technically feasible on existing aircraft. The amount of air that can be extracted from the engines is limited and might not support the high ventilation rates; in addition, the high rates would require ECU redesign, increased distribution ducting, outlet redesign, and control modification. A return to the random distribution of smokers throughout the cabin would decrease the peak concentrations of contaminants, but the Committee feels that this probably would be unacceptable to a majority of the traveling public.

The Committee recommends a ban on smoking on all domestic commercial flights, for four major reasons: to lessen irritation and discomfort to passengers and crew, to reduce potential health hazards to cabin crew associated with ETS, to eliminate the possibility of fires caused by cigarettes (see Chapter 1), and to bring cabin air quality into line with established standards for other closed environments (see discussion on ventilation in Chapter 2 and on specific pollutants in Chapter 5). The ban might have the added benefit of reducing airline maintenance costs for removal of tobacco tars. We note that some habitual smokers might experience nicotine deprivation on flights longer than 3 h. However, in the judgment of the Committee, the

2022933454

Source: https://www.industrydocuments.ucsf.edu/docs/jmvl0000

potential health effects of passive smoking are of more concern than the discomfort of withdrawal, and more people are at risk.

BIOLOGIC AEROSOLS

TYPES OF BIOLOGIC POLLUTANTS POSSIBLE IN AIRCRAFT

Most biologically derived particles that are known to become airborne could be present in aircraft cabin air. These include viruses, bacteria, actinomycetes, fungal spores and hyphae, arthropod fragments and droppings, and animal and human dander.[30]

Viruses that are known to be infective through the airborne route include rhinoviruses, influenza viruses, coxsackievirus, adenovirus, and measles virus. Disease transmission through the air is known to occur both by droplets and by droplet nuclei, which can be transported over relatively long distances.[79]

A wide variety of bacteria have been isolated from air. Those which have caused disease through airborne carriage include streptococci, mycobacteria, staphylococci, legionellae, pseudomonads, and klebsiellae.[79] Actinomycetes (so-called filamentous bacteria) that cause invasive disease are rarely isolated from air, but thermophilic (heat-loving) actinomycetes that have been implicated in hypersensitivity pneumonitis always produce disease through the airborne route. These include one or more species in the following groups: Thermoactinomyces, Thermomonospora, Saccharomonospora, and Micropolyspora.[20]

Most fungi produce spores and often hyphal fragments or single vegetative cells that can become airborne. Many of these fungi can grow and reproduce on surfaces within man-made structures and, when disturbed, produce dense biologic aerosols that accumulate within an enclosed space and cause hypersensitivity diseases--such as hypersensitivity pneumonitis, allergic rhinitis, and allergic asthma--and rarely invasive diseases in susceptible people.[30] Many infectious fungal diseases (including coccidioidomycosis, histoplasmosis, blastomycosis, and cryptococcosis) are also known to be

2022933455

Source: https://www.industrydocuments.ucsf.edu/docs/jmvl0000

transmitted through air carriage of spores or spore-bearing soil particles.

Various arthropod particles, including mites and cockroach droppings, have been recovered from air; these are known to be important allergens where they are abundant.[73] Fleas and mosquitoes become airborne through their own actions and can cause discomfort (bites), as well as transmit serious diseases.[139 166 175]

Finally, animal dander and human dander accumulate in any occupied space, and both can be allergenic.

SOURCES OF BIOLOGIC POLLUTANTS

Potential sources of biologic aerosols in cabin air include outside air, the cargo compartment, passengers and crew, and structural contamination of the aircraft.

At cruising altitudes, outside air contains very few biologic particles of any kind (a few dark fungal spores per cubic meter of air). These are unlikely to constitute any risk to airline passengers. Outside air that comes in through doorways while a plane is on the ground carries a wide variety of fungal spores, including a few pathogens. In the Southwest, where *Coccidioides immitis* is endemic, soil particles bearing infective spores often enter enclosures, especially during dust storms. Passengers boarding in these areas would have been exposed in transit to the airport. Passengers and crew stopping over (and not leaving the plane) could receive cabin-associated exposure when doors are open to unload passengers, galley materials, and baggage. Similar situations can arise for other airborne pathogenic fungi. However, control of such exposure would be difficult, because doors must be opened eventually. Most fungi in outdoor air are routinely encountered by everyone and, although allergenic for many, do not constitute a special risk in aircraft cabins. Bacteria are usually not present in outdoor air in concentrations sufficient to cause disease. Exceptions are species of *Legionella*, soil organisms that multiply in cooling towers and related man-made environments. Infected cooling towers are potential sources of aerosol-borne infection. How far such aerosols can travel in outdoor air and remain infective is unknown.

2022933456

Source: https://www.industrydocuments.ucsf.edu/docs/jmvl0000

Cargo compartments can contain animals (which have dander, feces, and urine), arthropods, microorganisms in culture, and contaminated baggage. Aerosols from all these sources could accumulate in a cargo compartment to a point that would be detrimental to human health. However, the potential for contamination of passenger compartments is less clear. Barriers to air circulation between passenger and cargo compartments can range from structural and excellent (Class D) to virtually nonexistent and dependent entirely on airflow patterns (Class B). The greatest danger from cargo sources would be associated with pathogenic microorganisms in cultures that are damaged during transit. The infective dose of some pathogens is a single cell. Pathogens can be transported by mail and are allowed in passenger aircraft if properly packaged. These microorganisms should not be permitted in passenger aircraft, and any nonpathogenic microorganisms in culture should be packed so as to eliminate any possibility of escape.

Primary sources of indoor bacterial and viral aerosols are humans and animals.[141] In addition to bacteria and viruses, clothes-borne fungi and actinomycetes can be carried by people and pets, as can mites. Bacteria are freely shed from human skin with minute skin scales. Clothing contains some of this contamination, and its abrasive action also detaches outer skin layers and increases shedding.[141] Thus, bacteria from this source would be expected to increase during boarding and settling activities and during meal and beverage distribution and to decrease during inactive periods. Occupants can also spread bacteria and viruses by coughing, sneezing, talking, singing, etc.[88] Coughing and sneezing produce the biologically richest aerosols. A sneeze produces very large droplets (200 μm and larger).[141] Immediately on release, respiratory droplets begin to dry. Many become droplet nuclei, which are very small, remain airborne for long periods, and (depending on the organisms and environmental conditions) can remain infective for hours or even days. There is no evidence that the HTLV-III virus, which is associated with acquired immune deficiency syndrome, is transmitted through the air or by casual human contact.

Structural contamination—especially in heating, ventilation, and air-conditioning systems—is of

2022933457

Source: https://www.industrydocuments.ucsf.edu/docs/jmvl0000

increasing concern.[102] Fungi, actinomycetes, bacteria (including species of Legionella), and protozoans have been found to inhabit such systems in large buildings and have caused widespread disease outbreaks when introduced in aerosol form through the action of the systems themselves. In an aircraft, possible sites of such contamination are the ventilation systems (with their associated filters and water removers) and a wide variety of surfaces, including carpets, upholstered seats, and even metallic surfaces that are persistently or repeatedly wet. Fungi and actinomycetes, in particular, can withstand repeated wet-dry cycles and temperature extremes.

FACTORS AFFECTING AIRBORNE CONCENTRATIONS OF BIOLOGIC POLLUTANTS AND THEIR HEALTH EFFECTS

Factors that can affect airborne concentrations of biologically derived particles include source strength, methods of aerosolization, viability, stability, and ventilation.

Source-strength factors include the number of people and animals in the enclosed space, the number with respiratory or skin infections, and a wide variety of aspects of microbial growth, such as amount of total growth available (which depends on substrate availability, nutrients, water, temperature, and pH), degree of sporulation (which depends on light, temperature, and relative humidity), and spore-cell availability (which depends on viability and colony surface configuration).

Methods of aerosolization include active spore discharge and passive dispersal—coughing, sneezing, talking, air movement, water splashing, and jarring and turbulence. A sneeze produces approximately 2 million viable particles.[141] These do not remain airborne very long, but are highly infective and can be inhaled by people near the infected source. Talking can produce as many as 2,000 particles per explosive sound. Most important for dissemination of fungal aerosols are passive modes, such as air movement over contaminated surfaces. Other biogenic particles—such as skin bacteria, arthropod remains, and dander—are usually introduced into the air through jarring. This can

2022933458

Source: https://www.industrydocuments.ucsf.edu/docs/jmvl0000

result from human activity (walking on contaminated surfaces, sitting on contaminated seats, or vacuum-cleaning or dusting surfaces) or from jarring of the entire structure (as might be possible in an airplane during turbulent weather). Such antigens as those from fungi, arthropods, and dander do not need to be living to cause hypersensitivity responses, but bacteria and viruses must be viable to be infective.

Among many factors that influence the length of time that bacterial and viral aerosols remain viable are relative humidity, temperature, and time.[120] For viruses, relative humidity and viability are inversely proportional.[91 105] For some bacteria, the situation is reversed: the higher the humidity, the longer the survival. Thus, although the low relative humidities present in most aircraft during flight can be deadly for some bacteria, such conditions probably augment the viability of most viruses. Temperature, which is limiting in extremely cold or extremely hot environments, is unlikely to be a strong factor in an aircraft, where temperature is usually maintained within a comfortable range for the passengers. All organisms die eventually, and each has its own life span. Under ideal conditions, this span can vary among microorganisms, from minutes to many years. Certainly, many microorganisms that cause human disease live long enough even in the stressful environment outside their human hosts to cause disease in enclosed situations.

The ventilation characteristics that directly affect concentrations of biologic particles are the ones that affect concentrations of all interior particles: the quality and quantity of outside air and the quality of filtration in the recirculation systems. The outside air supplied to aircraft cabins during flight is essentially clean. Enough outside air needs to be supplied to dilute the inevitably produced bacterial aerosols to the point where the risk of infection is minimized. Filters currently used in aircraft ventilation systems probably remove only a very small fraction of the continually produced bioaerosols, although data are not available to assess this accurately.

2022933459

Source: https://www.industrydocuments.ucsf.edu/docs/jmvl0000

AIRBORNE CONCENTRATIONS NECESSARY TO CAUSE HEALTH EFFECTS OR DISCOMFORT

Dose-response relations for most organisms are unknown and differ widely from one organism to another. One infectious droplet is sufficient to cause tuberculosis infection, but thousands of droplets are probably necessary to transmit rhinoviruses. In fact, infective dose varies not only with the individual virus or bacterium, but also with such host susceptibility factors as vulnerability of specific cells in the respiratory tract, antibody concentrations, and the presence of predisposing conditions.[79] For example, a person who is in any way immunocompromised—through disease, chemotherapy, or radiation therapy—is highly susceptible to all forms of infection and should not frequent indoor spaces occupied by potentially infectious people. The numbers of spores or particles or concentrations of antigens required to induce hypersensitivity diseases remain completely unknown and most likely vary greatly with the susceptibility of exposed persons.[115]

AVAILABLE DATA

Available Predictive Data from Other Sources

No other environment closely approximates the unusual conditions present in aircraft cabins, but data from a few other sources can be used to predict potential problems aboard aircraft and to provide direction for the design of research. Submarine and spacecraft environments are most nearly like the commercial aircraft environment, except that all their air must be recirculated, because outside air is unavailable. In both, recirculation systems are designed with that in mind, and the quality of air filtration far exceeds that in commercial airliners. In submarines, as many as 30,000 bacteria/ft^3 of air were isolated during sewage handling procedures.[167] However, concentrations generally remain below 20/ft^3, comparable with those in surface ships.[103] Microbiologic measurements were made in the Apollo and Skylab missions.[27 28] In neither case were concentrations above those expected in other types of interiors. In one Skylab mission, fungal spores were more numerous than expected (but still less numerous than

2022933460

Source: https://www.industrydocuments.ucsf.edu/docs/jmvl0000

in ground-level outside air), because moldy garments were on board. These data are only marginally relevant to the aircraft environment, because there are major differences in ventilation, air filtration, and passenger load.

Data from doctors' offices and schools clearly indicate that viruses can be circulated through ventilation systems, remain viable, and infect people who have had no physical contact with the source.[22 121] In aircraft cabins, this effect might be augmented by the low relative humidity, which would prolong the life of airborne viruses. It is also apparent from the literature on environmentally tight buildings that microbiologic contamination of heating and ventilation systems can be a serious problem.[120] Although aircraft systems differ substantially from ground-based systems, they have a potential for surface contamination, because temperature differences can cause water to condense and provide suitable substrates for microbial growth.

Available Data on Aircraft

No well-designed research studies that document routine concentrations of microbiologic air contaminants in the aircraft cabin environment have been reported. Studies of other cabin air characteristics either ignore microbiologic contaminants or dismiss them with an unsupported statement that they were "not found." One study, by Air Canada,[37] was carefully designed to assess the risks to healthy passengers and crew associated with transporting passengers with contagious diseases. Bacterial endospores were sprayed from a position five rows from the rear of the aircraft (the position determined, by smoke tracer studies, least likely to cause cabin-wide contamination). During the pretakeoff phase, when the plane was on recirculated air, these spores, although most heavily concentrated near the release site, circulated throughout the cabin and into the cockpit. On takeoff, concentrations away from the source decreased rapidly, but they increased again during descent and landing. The authors stated that background concentrations were low because of the high rate of air exchange in the cabin, but did not present background data. They concluded that infectious passengers should be carried in the left rear of the aircraft (B-707) and that the engines should be started and forced ventilation

2022933461

Source: https://www.industrydocuments.ucsf.edu/docs/jmvl0000

begun before such passengers board. Even under those circumstances, it is apparent that a strongly emitting source can contaminate the whole aircraft and that the risk is greatest on the ground and when recirculation is a component of the ventilation.

The risk of contracting epidemic disease on a grounded aircraft is emphasized by a report of an epidemic of influenza directly traceable to a passenger aboard a plane grounded for 4 h in Alaska; 72% of the passengers became ill from the exposure.[104] The absence of other such reports in the literature does not lessen the danger implicit in conditions in a crowded airplane with little or no outside ventilation. This particular epidemic was unusual, in that most patients saw the same physician (in Kodiak), who was in a position to recognize the implications of the situation. If the flight had terminated in Washington, D.C., for example, no physician would have been in a position to recognize even that an epidemic had occurred. Because of the heavy potential risk of spread of infectious disease in aircraft on the ground with no outside ventilation, we recommend that no aircraft with passengers on board remain on the ground without operational forced ventilation for longer than 0.5 h. Open doors are <u>not</u> adequate ventilation sources in this situation. If forced ventilation cannot be initiated within 0.5 h, passengers should be returned to the terminal. This 0.5-h time limit is based on practical consideration of the time required to return a full load of passengers to the terminal. In fact, microbial concentrations will begin to increase as soon as ventilation fails, and risks related to these exposures are unknown.

There are at least four reports of malaria contracted by passengers on aircraft or by visitors to airports shortly after aircraft arrived from areas where malaria was endemic. These cases of malaria very likely resulted from aircraft carriage of malaria-carrying mosquitoes.[139 166 175]

CONCLUSIONS AND RECOMMENDATIONS

Microbial concentrations have not been measured in aircraft, and therefore accurate risk assessments cannot be made. The Committee feels that microbial aerosols

2022933462

Source: https://www.industrydocuments.ucsf.edu/docs/jmvl0000

should be measured. A protocol for sampling microbial aerosols in commercial aircraft was developed at the University of Michigan for a pilot study (H. A. Burge, personal communication). This protocol should be tested and expanded into a substantial research effort. Despite the lack of data, the potential for microbial aerosols in aircraft exists, and concentrations can be predicted to be related to ventilation characteristics. Therefore, when ventilation systems are inoperative, passengers should leave the plane within 0.5 h. In addition, physicians should be reminded of the rules stating that infectious passengers must not travel on commercial airliners. It is recognized that many infectious conditions are transmissible long before symptoms appear, rendering this rule relatively valueless, except for severe contagious illnesses. If the risk of infection is to be minimized, the amount of outside air supplied to each passenger during flight should be maximized, because outside air at cruise altitude is essentially clean. The dangers of extensive use of unfiltered, untreated recirculated air should be carefully considered. Every feasible effort should be made to ensure that wet surfaces are prevented or scrupulously cleaned routinely, to prevent structural contamination. Finally, cargo compartments should be kept free of animal excrement, as well as arthropod pests, and pathogenic microorganisms should never be transported on passenger-carrying aircraft.

RELATIVE HUMIDITY

Relative humidity is the ratio of the amount of water vapor in the air at a given temperature to the capacity of the air at that temperature. The term is generally used to mean the percentage of moisture present relative to the amount the air can hold at a given temperature and pressure. The term "vapor pressure" (expressed as millimeters of mercury) refers to the pressure exerted by the (water) vapor on the air mixture at a given temperature and pressure. "Water vapor content" or "water content" (expressed as weight per unit volume or weight of dry air) means the actual amount of water present in the air. All these terms are used in the literature related to relative humidity.

2022933463

Source: https://www.industrydocuments.ucsf.edu/docs/jmvl0000

With a constant supply of moisture, relative humidity decreases as temperature increases. The outside air used to ventilate aircraft cabins during flight is very cold and contains very little moisture. On a typical temperate-zone day, ambient air temperature falls from +60°F to -60°F (+15.6°C to -51.1°C) linearly between sea level and 35,000 ft (10.7 km), and the water content falls from 10 g/kg to less than 0.15 g/kg of dry air. This small amount of moisture plus whatever is accumulated from human sweat, respiration, and cooking activities is all that is available during flight.

AIRCRAFT VENTILATION AND RELATIVE HUMIDITY

In most aircraft, fresh air is brought in from outside through the engines, cooled, and delivered directly to the cabin with no humidification. Available water from this source, then, remains at about 0.15 g/kg, and, at 20-22°C (68-71.6°F); the relative humidity of the fresh air is less than 1%. The relation between relative humidity and amount of air supplied per passenger is shown in Figure 2-7. Moisture from the passengers themselves will cause relative humidity to increase, depending on the outside-air ventilation rate and the load factor, and it will decrease as rate of outside ventilation increases.

MEASURED RELATIVE HUMIDITY IN AIRCRAFT

Humidity measurements that have been made in aircraft cabins are summarized in Table 5-5. Because of the paucity of data and the failure to indicate outside-air ventilation rates, correlations among relative humidity, load factors, and duration of flight cannot be based on these data. The Lufthansa data[94] (one flight on one aircraft) indicate a fall in relative humidity during flight from 25% to 8.5%. At cabin temperatures of 20-23°C (68-73.4°F), these data suggest that actual water content falls from 4.3 to 1.8 g/m^3 as a function of duration of flight. These values correspond to vapor pressures in the range of 2-6 mm Hg.

2022933464

Source: https://www.industrydocuments.ucsf.edu/docs/jmvl0000

TABLE 5-5

Relative Humidity Measured in Aircraft Cabins

Study	Aircraft	Relative Humidity, % Range	Min.	Mean	Max.
Lufthansa[94]	B-747	8.5-25		13	
Applegate[8]	B-747	6.0-40	9.1		16
	DC-10	5.0-34	10.75		22.75
	DC-8	6.0-25	10.5		15.0
	B-727	6.0-16	8.75		12.5
	B-737	17-31	22		25
		Water Content, g/kg of dry air			
Balvanz et al.[19]	B-727		1.5		
	B-737		1.74		
	B-747		1.39		
	B-767		0.739		
	DC-9		2.8		
	DC-10		6.0		

STANDARDS FOR OTHER ENVIRONMENTS

ASHRAE Standard 55-1981, Thermal Environmental Conditions for Human Occupancy,[5] calls for vapor pressure to range from 5 to 14 mm Hg. The lower end of this scale represents 20% relative humidity at an adjusted dry-bulb temperature of about 72°F (22.2°C).

EFFECTS OF LOW RELATIVE HUMIDITY ON PASSENGERS AND CREW

Documented direct effects of low relative humidity on passengers and crew are few. Corneal ulcerations have been reported in wearers of contact lenses after long flights, possibly owing to low oxygen partial pressure, as well as low relative humidity. Hydrophilic contact lenses tend to lose water, but not to the detriment of vision.[46] Removal of contact lenses and the wearing of contact lenses specially designed for use in dry air are successful remedial actions.[40 70] Eng et al.[46] reported that a high percentage of flight

2022933465

Source: https://www.industrydocuments.ucsf.edu/docs/jmvl0000

attendants complain of dry eyes; however, the value of this questionnaire study is limited because of possible selection bias and lack of controls (see Chapter 6). Of 293 flights on which incidents regarding cabin air quality were reported (presented by the Association of Flight Attendants before a Senate subcommittee), only 27 flights (9%) included complaints of dry eyes, dry throat, dry nose, or dry air. On only three flights were there complaints of "dry air".[18]

Mendez Martin[99] and Kohler[81] showed that urinary calculosis was common among flight personnel, possibly because of low relative humidity, but the Committee found no corroboration of this finding (see Chapter 6).

REPORTED HEALTH EFFECTS OF LOW RELATIVE HUMIDITY IN OTHER ENVIRONMENTS

Water loss from airways might be an important stimulus of exercise-induced asthma under dry conditions,[7 87] and a slight reduction in lung capacity has been noted in asthmatics at rest in dry environments. In addition, low relative humidity can increase bronchomotor effects of sulfur dioxide in mild asthmatics.[138] At 0% relative humidity, sulfur dioxide at 0.1-0.25 ppm is sufficient to cause a 100% increase in specific airway resistance. This effect has not been studied in the normal population, and synergistic effects between low relative humidity and other pollutants have not been examined. However, low relative humidity itself probably does not cause bronchoconstriction in normal people. In fact, no significant changes in nasal mucus flow rates, nasal or tracheobronchial resistance, or comfort were found in a group of eight healthy men maintained at 9% relative humidity for 79 h.[6] Rappaport et al.[119] indicated that reduced relative humidity (15-40%) might be beneficial to pollen-asthma sufferers. Abrupt changes in relative humidity (more than 10%) can cause discomfort in some people, but re-equilibration tends to occur within about 15 min.

Evidence on the common belief that low relative humidity increases the risk of respiratory infection is conflicting. The Baetjer studies[17] with mice and chicks found some correlation between virus titers and low

2022933466

Source: https://www.industrydocuments.ucsf.edu/docs/jmvl0000

humidity with high temperature, a combination not common in aircraft. Mucociliary clearance rates in chicks exposed to a range of temperatures and vapor pressures were increased at low vapor pressures; most of these experiments failed to duplicate aircraft cabin temperatures and humidity. Baetjer commented on possible effects of temperature and vapor pressure on the skin (including absorption of noxious chemicals), but presented no data to indicate that low vapor pressures diminish or amplify skin absorption.

Melia et al.[98] reported a positive correlation of respiratory infections with relative humidity, i.e., as humidity increased, respiratory infections increased; but the relative humidity was higher than that in aircraft. The one disease state in which high relative humidity has been thought to be at least palliative, croup, has been shown to be unaffected by even very high humidities.[23] It has been shown that people overwintering at the Antarctic station, where indoor relative humidities approach those in aircraft cabins, are not at increased risk of respiratory infections after their return to a more temperate environment.[72] These data are only marginally relevant to cabin air quality, because there are major differences in conditions and patterns of exposure. Lidwell et al.[89] demonstrated that increased incidence of respiratory infection in winter is related to temperature, not to relative humidity, and stated that this analysis "contradicts any arguments based on virus survival in relation to indoor humidity or on a postulated damaging effect, due to drying, on the mucous membranes, predisposing to the initiation of infection when the indoor humidity falls in cold weather." However, after a less extensive study, Gelperin[54] reported that the rate of upper respiratory infection was 5-10% lower in humid barracks (relative humidity, 40%) than in unhumidified barracks (relative humidity, 20%). He reported an equivalent decrease in foot infections that is difficult to explain. Green et al.[56] reported data from Saskatoon schools that indicated slightly lower absenteeism (4.6% vs. 5.1%) in schools with slightly higher relative humidity (overall relative humidity range, 18.4-38.6%); the data show a marginal effect of relative humidity in a range not comparable with that found in aircraft cabins.

2022933467

Source: https://www.industrydocuments.ucsf.edu/docs/jmvl0000

Low relative humidity has been shown to be a factor in dry, scaly skin rashes when specific irritants are also present[173] and to contribute to winter drying and chapping of hands and face when accompanied by exposure to excess cold or water. Assuming that flight attendants wash their hands often, dry aircraft air could cause increased problems with rough dry hands, but would be unlikely to affect passengers, who are exposed relatively briefly.

Indirect effects of relative humidity on passengers and crew are associated primarily with the viability of microorganisms. Humidification of schools has been considered important for many years as a means of decreasing virus survival, but decreased concentrations of viruses in humid school air have not been documented. It has been shown that concentrations of some bacteria can be directly related to relative humidity: as humidity decreases, bacterial concentrations decrease. As mentioned earlier, indoor fungal spore concentrations are also directly related to relative humidity.

SUMMARY

The health risks associated with clean, dry air appear quite low, especially for normal people, and probably do not justify the cost and potential microbiologic complications that would attend installation of active humidification systems in aircraft.

PRESSURIZATION

The Committee recognizes that pressurization of the cabin to an equivalent altitude of 5,000-8,000 ft is physiologically safe--no supplemental oxygen is needed to maintain sufficient arterial oxygen saturation. The percentage of oxygen remains virtually unchanged (21%) at all altitudes. But partial pressures of gases change, as shown in Table 5-6, where the partial pressure of oxygen is shown to decrease from 160 mm Hg at sea level to 110 mm Hg at 10,000 ft. The oxygen-hemoglobin dissociation figures, which indicate the amount of oxygen held by hemoglobin at various partial pressures of oxygen, clearly show that the dissociation

2022933468

Source: https://www.industrydocuments.ucsf.edu/docs/jmvl0000

TABLE 5-6

Hypobaric Pressure and Arterial Oxygen Saturation[a]

Pressure Altitude, ft	Atmospheric Pressure, mm Hg	Oxygen Partial Pressure,[b] mm Hg	Arterial Oxygen Saturation Without Supplemental Oxygen, %
0	760	160	96
2,500	694	147	95
5,000	632	133	95
7,500	575	121	93
10,000	523	110	89

[a] Data from Mohler.[101]
[b] 20% of atmospheric pressure.

of oxygen from hemoglobin decreases with decreasing partial pressure of oxygen. There is a decrement in night vision at 4,000-6,000 ft, and a 7-10% decrement in maximal performance at altitudes between 7,000 and 10,000 ft. Cabin altitudes can legally reach 8,000 ft, but after failure of the pressurization system could reach as high as 15,000 ft. At these altitudes, people with advanced cardiopulmonary disease might be at some risk.

The normal rates of change of cabin pressure (500 ft/min in increasing altitude and 300 ft/min in decreasing altitude) do not pose a problem for passengers in normal health. However, persons suffering from upper respiratory infections might experience pain of varied severity, temporary loss of hearing, and tinnitus due to inflammation of the nasopharyngeal orifice of the eustachian tube or due to swelling of mucous membranes in the sinus ostia. Cabin crew members should be advised as to the symptoms and procedures to alleviate them.

The Committee sought evidence of operating practices in which an aircraft was pressurized at altitudes above 8,000 ft, but could not find any records that would confirm the existence of such a practice. Because operation of the pressure control system on modern jet aircraft is usually fully automatic, the likelihood of

2022933469

Source: https://www.industrydocuments.ucsf.edu/docs/jmvl0000

excursions above 8,000 ft is small. In addition, regulations require that an audible or visible warning be given to the crew if the cabin altitude exceeds 10,000 ft. Nevertheless, the Committee believes that systematic measurement of cabin pressure on a representative sample of routine commercial flights would be advisable. The information gathered could be used to assess the adequacy of current requirements or establish a basis for regular monitoring, if necessary.

The Committee recognizes that properly informing the public about health risks is complicated and difficult. Many physicians advise their patients about health risks of flying, but passengers do not always consult physicians about their travel plans, so this method is not as effective as it should be. Carefully worded messages could be made available to potential airline passengers with acute or chronic middle ear problems, heart problems, or lung disease. This could be accomplished through provision of the information at ticket counters or through travel agents and others who sell tickets.

CARBON DIOXIDE

Carbon dioxide is the product of normal human metabolism, which is the predominant source in aircraft cabins. The carbon dioxide concentration in the cabin depends on the ventilation rate, the number of people present, and their individual rates of carbon dioxide production, which vary with activity and (to a smaller degree) with diet and health.

Federal Aviation Regulations[163] specify that "carbon dioxide in excess of 3 percent by volume (sea level equivalent) is considered hazardous in the case of crewmembers. Higher concentrations of carbon dioxide may be allowed in crew compartments if appropriate protective breathing equipment is available" (see Chapter 3). In contrast, ASHRAE Standard 62-1981, Ventilation for Acceptable Air Quality,[4] bases indoor ventilation requirements on a carbon dioxide production rate of 0.63 cubic foot per hour (cfh) per person and outside air containing 0.03% carbon dioxide. Ventilation calculations are based on a limit of 0.5% carbon dioxide. However, as an additional safety factor

2022933470

Source: https://www.industrydocuments.ucsf.edu/docs/jmvl0000

to cover individual activity levels and diet and health variations, a recommended limit of 0.25% carbon dioxide is used, and that establishes a ventilation rate of 5 cfm/person. In comparison, the environmental exposure limit adopted in 1984-1985 by the American Conference of Governmental Industrial Hygienists (ACGIH) gives 5,000 ppm as the time-weighted average (TWA).[2] The TWA is the concentration, for a normal 8-h workday and a 40-h workweek, to which nearly all workers can be repeatedly exposed, day after day, without adverse effects. The Occupational Safety and Health Administration also lists the 5,000-ppm concentration as the TWA for workers.[149] ACGIH has a short-term exposure limit (STEL) of 15,000 ppm, although it has issued a notice of intended change to 30,000 ppm. A STEL is defined as a 15-min TWA exposure that should not be exceeded at any time during a working day.

Under normal conditions, carbon dioxide at 0.6% has little effect on lung function, increasing it only about 10% above normal. As carbon dioxide concentration increases, there is an increase in both the rate and the depth of breathing, which reaches twice normal at 3% carbon dioxide. At that concentration, there is some discomfort; as it increases, headache, malaise, and fatigue occur, and the air is reported as stale. At altitudes up to 8,000 ft, the reduced pressure has no significant effect on the symptoms or other response to increased carbon dioxide concentrations.

In discussing federal regulations, Chapter 3 pointed out that the current FAR concerning acceptable cabin concentrations of carbon dioxide is several decades old. The Committee finds that there is a need to consider revision of this standard and recommends that FAA review it in the light of more recent scientific findings and in comparison with standards established for air quality in buildings occupied by the general public and with workplace exposure limits adopted by ACGIH. If any potential for hazardous concentrations is discovered, the analysis should be supported by appropriate testing.

OTHER POTENTIAL EXPOSURES

Aircraft occupants can be exposed to a number of pollutants from materials used to construct or maintain

2022933471

Source: https://www.industrydocuments.ucsf.edu/docs/jmvl0000

the cabin. These include volatile organic chemicals emitted by materials used in furnishing the cabin, pesticides, and cleaning agents.

Volatile organic chemicals in the aircraft cabin have numerous potential sources: adhesives, lubricants, elastomers, sealing compounds, coatings, etc., used in the construction or maintenance of the cabin interior. Some of these products have been tested for offgassing of volatile chemicals as part of a government space study.[117] The offgassing chemicals include acetone, ethanol, benzene, toluene, and n-butanol. Many of them have serious toxicity (for example, benzene is a known human carcinogen). However, exposure to them would be affected by the type and amount of the offgassing products used in the aircraft, the rate of offgassing under the conditions of use, the age of the products, and the ventilation rate in the aircraft. The Committee could find no monitoring data on the concentrations of volatile organic chemicals in aircraft cabins during operation.

Insecticides can be used on aircraft to control pests of public-health or agricultural importance. The Centers for Disease Control (CDC) Division of Quarantine is authorized to require removal of insects from aircraft leaving foreign areas that are infected with insect-borne communicable disease, if the aircraft are suspected of harboring insects of public-health importance.[43] Insecticides used by the airlines must be approved by CDC. In 1979, it approved resmethrin (2% aerosol) and d-phenothrin (2% aerosol) for use in aircraft.[152] However, CDC does not now require the use of pesticides on aircraft (B. Coull, personal communication, 1986). If an aircraft is suspected of harboring insects of particular agricultural importance (notably the Japanese beetle), the Department of Agriculture can require fumigation.[71] d-Phenothrin is used in some aircraft traveling from regulated airports in the eastern United States to protected areas in the western United States, when inspectors deem it advisable.

d-Phenothrin and resmethrin, like other pyrethroids, are neither skin irritants nor skin sensitizers. Inhalation toxicity and dermal toxicity are fairly low. Neither is teratogenic in rats, mice, or rabbits or mutagenic in various bacterial strains.[100] Both are

2022933472

Source: https://www.industrydocuments.ucsf.edu/docs/jmvl0000

highly effective in killing some species of flies, mosquitoes, and other flying insects.[34 132] In a test of physical and insecticidal properties of (+)-phenothrin, Liljedahl et al.[90] found that none of the cabin crew or scientists who were present experienced any odor or irritation during the use of the insecticide or from the residual deposit. Sullivan et al.,[147] in worldwide aircraft trials, found resmethrin to be acceptable to 92% of the passengers questioned after the cabin was sprayed.

Although no health problems among cabin occupants or crew have been reported as a result of the use of insecticides, there is always a potential for health problems due to their improper application.

Disinfectants and cleaning chemicals used on aircraft can also be a source of exposure to occupants and might cause health problems in some people. For example, carpet shampoos have been linked to outbreaks of respiratory illness among people exposed soon after shampoo application.[83 122] Although the Committee has no data or other documentation on health problems caused by these types of chemicals used on aircraft, it is reasonable to assume that they could occur on aircraft if appropriate precautions were not followed.

REFERENCES

1. Adlkofer, F., G. Scherer, and H. Weimann. Small-airways dysfunction in passive smokers. N. Engl. J. Med. 303:392, 1980. (letter)

2. American Conference of Governmental Industrial Hygienists. Carbon dioxide, pp. 69-70. In Documentation of the Threshold Limit Values. 4th ed. Cincinnati, Ohio: American Conference of Governmental Industrial Hygienists, 1984.

3. American Lung Association. Americans Want Smoke-Free Air at Work. New York, N.Y.: American Lung Association, Dec. 5, 1985.

2022933473

Source: https://www.industrydocuments.ucsf.edu/docs/jmvl0000

4. American Society of Heating, Refrigerating, and Air-Conditioning Engineers, Inc. ASHRAE Standard: Ventilation for Acceptable Air Quality. ASHRAE 62-1981. Atlanta, Ga.: American Society of Heating, Refrigerating, and Air-Conditioning Engineers, Inc., 1981.

5. American Society of Heating, Refrigerating, and Air-Conditioning Engineers, Inc. Thermal Environmental Conditions for Human Occupancy. ANSI/ASHRAE 55-1981. Atlanta, Ga.: American Society of Heating, Refrigerating and Air-Conditioning Engineers, Inc., 1981.

6. Andersen, I., G. R. Lundqvist, P. L. Jensen, and D. F. Proctor. Human response to 78-hour exposure to dry air. Arch. Environ. Health 29:319-324, 1974.

7. Anderson, S. D., R. E. Schoeffel, R. Follet, C. P. Perry, E. Daviskas, and M. Kendall. Sensitivity to heat and water loss at rest and during exercise in asthmatic patients. Eur. J. Respir. Dis. 63:459-471, 1982.

8. Applegate, W. C. Aircraft Cabin Air Quality Study. (unpublished document, United Airlines, 1982)

9. Araki, Y., and K. Kasano. Building control law and dust collectors. Mitsubishi Denki Giho 48:470-477, 1974. (in Japanese)

10. Aronow, W. S. Aggravation of angina pectoris by two percent carboxyhemoglobin. Am. Heart J. 101:154-157, 1981.

11. Aronow, W. S. Effect of carbon monoxide on cardiovascular disease. Prev. Med. 8:271-278, 1979.

12. Aronow, W. S. Effect of passive smoking on angina pectoris. N. Engl. J. Med. 299:21-24, 1978.

2022933474

Source: https://www.industrydocuments.ucsf.edu/docs/jmvl0000

13. Aronow, W. S., J. Cassidy, J. S. Vangrow, H. March, J. C. Kern, J. R. Goldsmith, M. Khemka, J. Pagano, and M. Vawter. Effect of cigarette smoking and breathing carbon monoxide on cardiovascular hemodynamics in anginal patients. Circulation 50:340-347, 1974.

14. Aronow, W. S., and M. W. Isbell. Carbon monoxide effect on exercise-induced angina pectoris. Ann. Intern. Med. 79:392-395, 1973.

15. Association of Flight Attendants. Exhibit A (passenger comments and flight attendant symptoms, 01/77-01/82). In U.S. Senate, Committee on Commerce, Science, and Transportation, Subcommittee on Aviation (97th Congress, 2nd Session). Airliner Cabin Safety and Health Standards: Hearing on S. 1770, May 20, 1982. Washington, D.C.: U.S. Government Printing Office, 1982.

16. Aviado, D. M. Small-airways dysfunction in passive smokers. N. Engl. J. Med. 303:393, 1980. (letter)

17. Baetjer, A. M. Role of environmental temperature and humidity in susceptibility to disease. Arch. Environ. Health 16:565-570, 1968.

18. Baily, P. E. Neutron radiation dosimetry in high altitude flight personnel. Aviat. Space Environ. Med. 53:808-817, 1982.

19. Balvanz, J., S. C. Bowman, A. Fobelets, T. Lee, K. Papamichael, and R. Yoder. Examination of the Cabin Environment of Commercial Aircraft. Ames, Iowa: Iowa State University, 1982.

20. Banaszak, E. F., J. Barboriak, J. Fink, G. Scanlon, D. Schlueter, A. Sosman, W. Thiede, and G. Unger. Epidemiologic studies relating thermophilic fungi and hypersensitivity lung syndromes. Am. Rev. Respir. Dis. 110:585-591, 1974.

2022933475

Source: https://www.industrydocuments.ucsf.edu/docs/jmvl0000

21. Barth, D. S., J. C. Romanovsky, J. H. Knelson, A. P. Altshuller, and R. J. Horton. National air quality standards for automotive pollutants: A critical review. J. Air Pollut. Control Assoc. 21:544-548, 1971.

22. Bloch, A. B., W. A. Orenstein, W. M. Ewing, W. H. Spain, G. F. Mallison, K. L. Herrmann, and A. R. Hinman. Measles outbreak in a pediatric practice: Airborne transmission in an office setting. Pediatrics 75:676-683, 1985.

23. Bourchier, D., K. P. Dawson, and D. M. Fergusson. Humidification in viral croup: A controlled trial. Aust. Paediatr. J. 20:289-291, 1984.

24. Brabets, R. I., C. K. Hersh, and M. J. Klein. Ozone measurement survey in commercial jet aircraft. J. Aircraft 4:59-64, 1967.

25. Bramlitt, E. T. Commercial aviation crewmember radiation doses. Health Phys. 49:945-948, 1985.

26. Bramlitt, E. T. Radiation safety requirements for crewmembers: Petition for rulemaking. Federal Register 49:31298, 1984.

27. Brockett, R. M., and J. K. Ferguson. Microbiological sampling of the spacecraft atmosphere during a simulated Skylab mission. Aviat. Space Environ. Med. 46:30-32, 1975.

28. Brockett, R. M., J. K. Ferguson, and M. R. Henney. Prevalence of fungi during Skylab missions. Appl. Environ. Microbiol. 36:243-246, 1978.

29. Brunekreef, B., P. Fischer, B. Remijn, R. van der Lende, J. Schouten, and P. Quanjer. Indoor air pollution and its effect on pulmonary function of adult non-smoking women. III. Passive smoking and pulmonary function. Int. J. Epidemiol. 14:227-230, 1985.

2022933476

Source: https://www.industrydocuments.ucsf.edu/docs/jmvl0000

30. Burge, H. A. Indoor sources for airborne microbes in indoor air and human health, pp. 139-148. In R. B. Gammage and S. V. Kaye, Eds. Indoor Air and Human Health. Chelsea, Mich.: Lewis Publishers, 1985.

31. Cabin ozone concentrations. Code of Federal Regulations, Title 14, Pt. 25.832. Washington, D.C.: U.S. Government Printing Office, 1985.

32. Cain, W. S., B. P. Leaderer, R. Isseroff, L. G. Berglund, R. J. Huey, E. D. Lipsitt, and D. Perlman. Ventilation requirements in buildings. I. Control of occupancy odor and tobacco smoke odor. Atmos. Environ. 17:1183-1197, 1983.

33. Cain, W. S., T. Tosun, L. C. See, and B. Leaderer. Environmental tobacco smoke: Sensory reactions of occupants. Atmos. Environ. 1986. (in press)

34. Cawley, B. M., W. N. Sullivan, M. S. Schechter, and J. U. McGuire. Desirability of three synthetic pyrethroid aerosols for aircraft disinsection. Bull. WHO 51:537-540, 1974.

35. Chan, W. C., and S. C. Fung. Lung cancer in non-smokers in Hong Kong, pp. 199-202. In E. Grundmann, J. Clemmesen, and C. S. Muir, Eds. Geographical Pathology in Cancer Epidemiology. Cancer Campaign. Vol. 6. Cancer Epidemiology. Stuttgart: Gustaav Fischer Verlag, 1982.

36. Clausen, G. H., P. O. Fanger, W. S. Cain, and B. P. Leaderer. Stability of tobacco smoke odor in enclosed spaces, pp. 437-441. In B. Berglund, T. Lindvall, and J. Sundell, Eds. Indoor Air: Sensory and Hyperreactivity Reactions to Sick Buildings. Vol. 3. Stockholm: Swedish Council for Building Research, 1984.

37. Clayton, A. J., D. C. O'Connell, R. A. Gaunt, and R. E. Clarke. Study of the microbiological environment within long- and medium-range Canadian Forces aircraft. Aviat. Space Environ. Med. 47:471-472, 1976.

2022293477

Source: https://www.industrydocuments.ucsf.edu/docs/jmvl0000

38. Cohen, D., S. F. Arai, and J. D. Brain. Smoking impairs long-term dust clearance from the lung. Science 204:514-517, 1979.

39. Comstock, G. W., M. B. Meyer, K. J. Helsing, and M. S. Tockman. Respiratory effects on household exposures to tobacco smoke and gas cooking. Am. Rev. Respir. Dis. 124:143-148, 1981.

40. Corboy, J. M., and J. C. Tannehill. Effects of air travel on contact lens wearers. Am. J. Ophthalmol. 76:166-167, 1973.

41. Correa, P., L. W. Pickle, E. Fontham, Y. Lin, and W. Haenszel. Passive smoking and lung cancer. Lancet 2:595-597, 1983.

42. Dahms, T. E., J. F. Bolin, and R. G. Slavin. Passive smoking: Effects on bronchial asthma. Chest 80:530-534, 1981.

43. Disinsection of aircraft. Code of Federal Regulations, Title 42, Pt. 71.44. Washington, D.C.: U.S. Government Printing Office, 1985.

44. Duncan, D. B., and P. P. Greaney. Passive smoking and uptake of carbon monoxide in flight attendants. JAMA 251:2658-2659, 1984. (letter)

45. Elliott, L. P., and D. R. Rowe. Air quality during public gatherings. J. Air Pollut. Control Assoc. 25:635-636, 1975.

46. Eng, W. G., L. K. Harada, and L. S. Jagerman. The wearing of hydrophilic contact lenses aboard a commercial jet aircraft. I. Humidity effects on fit. Aviat. Space Environ. Med. 53:235-238, 1982.

47. Ferin J., G. Urbankova, and A. Vlckova. Influence of tobacco smoke on the elimination of particles from the lungs. Nature 206:515-516, 1965.

48. Flight time limitations: All flight crewmembers. Code of Federal Regulations, Title 14, Pt. 121.471. Washington, D.C.: U.S. Government Printing Office, 1985.

2022933478

Source: https://www.industrydocuments.ucsf.edu/docs/jmvl0000

49. Foliart, D., N. L. Benowitz, and C. E. Becker. Passive absorption of nicotine in airline flight attendants. New Engl. J. Med. 308:1105, 1983. (letter)

50. Folinsbee, L. J., B. L. Drinkwater, J. F. Bedi, and S. M. Horvath. The influence of exercise on the pulmonary function changes due to exposure to low concentrations of ozone, pp. 125-145. In L. J. Folinsbee, Ed. Environmental Stress: Individual Human Adaptations. New York, N.Y.: Academic Press, 1978.

51. Gallup Organization, Inc. 1985 Air Travel Survey. Washington, D.C.: Air Transport Association of America, 1985.

52. Garfinkel, L., O. Auerbach, and L. Joubert. Involuntary smoking and lung cancer: A case-control study. JNCI 75:463-469, 1985.

53. Garland, C., E. Barrett-Connor, L. Suarez, M. H. Criqui, and D. L. Wingard. Effects of passive smoking on ischemic heart disease mortality of nonsmokers. Am. J. Epidemiol. 121:645-650, 1985.

54. Gelperin, A. Humidification and upper respiratory infection incidence. Heating/Piping/Air Conditioning 45(3):77-78, 1973.

55. Gillis, G. R., D. J. Hole, V. M. Hawthorne, and P. Boyle. The effect of environmental tobacco smoke in two urban communities in the west of Scotland. Eur. J. Respir. Dis. 65(Suppl. 133):121-126, 1984.

56. Green, G. H., K. Sareen, and A. D. Osborne. The effect of ventilation and relative humidity upon airborne bacteria in schools. ASHRAE Trans. 91(2a):13-28, 1985.

57. Hahn, A., S. D. Anderson, A. R. Morton, J. L. Black, and K. D. Fitch. A reinterpretation of the effect of temperature and water content of the inspired air in exercise-induced asthma. Am. Rev. Respir. Dis. 130:575-579, 1984.

2022933479

Source: https://www.industrydocuments.ucsf.edu/docs/jmvl0000

58. Halfpenny, P. F., and P. S. Starrett. Control of odor and irritation due to cigarette smoking aboard aircraft. ASHRAE J. 3(3):39-44, 1961.

59. Heuss, J. M., G. J. Nebel, and J. M. Colucci. National air quality standards for automotive pollutants: A critical review. J. Air Pollut. Control Assoc. 21:535-544, 1971.

60. Hiller, F. C. Deposition of sidestream cigarette smoke in the human respiratory tract. Prev. Med. 13:602-607, 1984.

61. Hiller, F. C., K. T. McCusker, M. K. Mazumder, J. D. Wilson, and R. C. Bone. Deposition of sidestream cigarette smoke in the human respiratory tract. Am. Rev. Respir. Dis. 124:406-408, 1982.

62. Hirayama, T. Cancer mortality in nonsmoking women with smoking husbands based on a large-scale cohort study in Japan. Prev. Med. 13:680-690, 1984.

63. Hirayama, T. Non-smoking wives of heavy smokers have a higher risk of lung cancer: A study from Japan. Br. Med. J. 282:183-185, 1981.

64. Hoffmann, D., N. J. Haley, K. D. Brunnemann, J. D. Adams, and E. L. Wynder. Cigarette Sidestream Smoke: Formation, Analysis and Model Studies on the Uptake by Nonsmokers. U.S. Japan Meeting, New Etiology of Lung Cancer, Honolulu, Hawaii, March 21-23, 1983.

65. Horvath, S. M., J. A. Gliner, and L. J. Folinsbee. Adaptation to ozone: Duration of effect. Am. Rev. Respir. Dis. 123:496-499, 1981.

66. Horvath, S. M., J. A. Gliner, and J. A. Matsen-Twisdale. Pulmonary function and maximum exercise responses following acute ozone exposure. Aviat. Space Environ. Med. 50:901-905, 1979.

2022933480

Source: https://www.industrydocuments.ucsf.edu/docs/jmvl0000

67. Huber, G. L. Small-airways dysfunction in passive smokers. N. Engl. J. Med. 303:392-393, 1980. (letter)

68. International Commission on Radiological Protection. Statement from the 1983 Meeting of the International Commission on Radiological Protection. Ann. ICRP 14(1):v-vii, 1984.

69. International Radiological Protection Commission, Task Group on Lung Dynamics. Deposition and retention models for internal dosimetry of the human respiratory tract. Health Physics 12:173-207, 1966.

70. Jagerman, L. S. Effects of air travel on contact-lens wearers. Am. J. Ophthalmol. 75:533, 1973.

71. Japanese beetle. Code of Federal Regulations, Title 7, Pt. 301.48. Washington, D.C.: U.S. Government Printing Office, 1985.

72. Jennings, L. C., and J. L. Faoagali. A study of the susceptibility of Antarctic winter-over personnel to viral respiratory illness on their return to New Zealand. N. Z. Antarctic Record 3(1):29-30, 1980.

73. Kang, B., and J. L. Chang. Allergenic impact of inhaled arthropod material. Clin. Rev. Allergy 3:363-375, 1985.

74. Kauffmann, F., D. W. Dockery, F. E. Speizer, and B. G. Ferris, Jr. Respiratory symptoms and lung function in women with passive and active smoking. Am. Rev. Respir. Dis. 133:A157, 1986.

75. Kauffmann, F., J. F. Tessier, and P. Oriol. Adult passive smoking in the home environment: A risk factor for chronic airflow limitation. Am. J. Epidemiol. 117:269-280, 1983.

76. Kentner, M., G. Triebig, and D. Weltle. The influence of passive smoking on pulmonary function: A study of 1,351 office workers. Prev. Med. 13:656-669, 1984.

2022933481

Source: https://www.industrydocuments.ucsf.edu/docs/jmvl0000

77. Kerka, W. F., and C. M. Humphreys. Temperature and humidity effect on odor perception. ASHRAE Trans. 62: 531-552, 1956.

78. Klus, H., and H. Kuhn. Distribution of various tobacco-smoke components among mainstream and sidestream smoke: A survey. Beitr. Tabakforsch. 11:229-265, 1982.

79. Knight, V. Airborne transmission and pulmonary deposition of respiratory viruses, pp. 1-9. In V. Knight, Ed. Viral and Mycoplasmal Infections of the Respiratory Tract. Philadelphia, Pa.: Lea & Febiger, 1973.

80. Knoth, A., H. Bohn, and F. Schmidt. Passive smoking as cause of lung cancer in women non-smokers. Med. Klin. 78(2):66-69, 1983. (in German)

81. Kohler, F. P. Asymptomatic upper urinary tract lithiasis in flying personnel. J. Urol. 86:370-372, 1961.

82. Koo, L. C., J. H-C. Ho, and D. Saw. Is passive smoking an added risk factor for lung cancer in Chinese women? J. Exp. Clin. Cancer Res. 3:277-283, 1984.

83. Kreiss, K., M. G. Gonzales, K. L. Conright, and A. R. Scheere. Respiratory irritation due to carpet shampoo: Two outbreaks. Environ. Int. 8:337-341, 1982.

84. Kulle, T. J., L. R. Sauder, J. R. Hebel, and M. D. Chatham. Ozone response relationships in healthy nonsmokers. Am. Rev. Respir. Dis. 132:36-41, 1985.

85. Lategola, M. T., C. E. Melton, and E. A. Higgins. Effects of ozone on symptoms and cardiopulmonary function in a flight attendant surrogate population. Aviat. Space Environ. Med. 51:237-246, 1980.

2022933482

Source: https://www.industrydocuments.ucsf.edu/docs/jmvl0000

86. Lategola, M. T., C. E. Melton, and E. A. Higgins. Pulmonary and symptom threshold effects of ozone in airline passengers and cockpit crew surrogates. Aviat. Space Environ. Med. 51:878-884, 1980.

87. Lee, P. N. Passive smoking. Lancet 1:791, 1982. (letter)

88. Letts, R. M., and E. Doermer. Conversation in the operating theater as a cause of airborne bacterial contamination. J. Bone Joint Surg. 65:357-362, 1983.

89. Lidwell, O. M., R. W. Morgan, and R. E. O. Williams. The epidemiology of the common cold. IV. The effect of weather. J. Hyg. Camb. 63:427-439, 1965.

90. Liljedahl, L. A., H. J. Retzer, W. N. Sullivan, M. S. Schechter, B. M. Cawley, N. O. Morgan, C. M. Amyx, B. A. Schiefer, E. J. Gerberg, and R. Pal. Aircraft disinsection: The physical and insecticidal characteristics of (+)-phenothrin applied by aerosol at "blocks away." Bull. WHO 54:391-396, 1976.

91. Loosli, C. G., H. M. Lemon, O. H. Robertson, and E. Appel. Experimental air-borne influenza infection. I. Influence of humidity on survival of virus in air. Proc. Soc. Exp. Biol. Med. 53:205-206, 1943.

92. Los Angeles County Air Pollution Control District. Study of Jet Aircraft Emissions and Air Quality in the Vicinity of the Los Angeles International Airport. APTD-0662. Research Triangle Park, N.C.: U.S. Environmental Protection Agency, Air Pollution Control Office, 1971. (available from NTIS as PB-198699)

93. Lozano, E. R., W. W. Melvin, Jr., and S. Hochheiser. Air pollution emissions from jet engines. J. Air Pollut. Control Assoc. 18:392-394, 1968.

2022933483

Source: https://www.industrydocuments.ucsf.edu/docs/jmvl0000

94. Lufthansa German Airlines. Report on Air Quality Study with Half Pack Operation: 747. (unpublished, 1982)

95. MacMahon, B. Prenatal x-ray exposure and childhood cancer. JNCI 28:1173-1191, 1962.

96. MacMahon, B., and G. B. Hutchison. Prenatal x-ray and childhood cancer: A review. Acta Un. Int. Cancr. 20:1172-1174, 1964.

97. McDonnell, W. F., D. H. Horstman, M. J. Hazucha, E. Seal, Jr., E. D. Haak, S. A. Salaam, and D. E. House. Pulmonary effects of ozone exposure during exercise: Dose-response characteristics. J. Appl. Physiol. 54:1345-1352, 1983.

98. Melia, R. J. W., C. du V. Florey, R. W. Morris, B. D. Goldstein, H. H. John, D. Clark, I. B. Craighead, and J. C. Mackinlay. Childhood respiratory illness and the home environment. II. Association between respiratory illness and nitrogen dioxide, temperature and relative humidity. Int. J. Epidemiol. 11:164-169, 1982.

99. Mendez Martin, A. Urolithiasis among flight personnel. Med. Clin. (Barcelona):72:65-70, 1979. (in Spanish)

100. Miyamoto, J. Degradation, metabolism and toxicity of synthetic pyrethroids. Environ. Health Perspect. 14:15-28, 1976.

101. Mohler, S. R. Physiologically Tolerable Decompression Profiles for Supersonic Transport Type Certification. AM 70-12. Washington, D.C.: U.S. Federal Aviation Administration, Office of Aviation Medicine, 1970.

102. Morey, P. R., M. J. Hodgson, W. G. Sorenson, G. J. Kullman, W. W. Rhodes, and G. S. Visvesvara. Environmental studies in moldy office buildings: Biological agents, sources, and preventive measures. Ann. Am. Conf. Gov. Ind. Hyg. 10:21-35, 1984.

2022933484

Source: https://www.industrydocuments.ucsf.edu/docs/jmvl0000

103. Morris, J. E. W. Microbiology of the submarine environment. Proc. R. Soc. Med. 65:799-800, 1972.

104. Moser, M. R., T. R. Bender, H. S. Margolis, G. R. Noble, A. P. Kendal, and D. G. Ritter. An outbreak of influenza aboard a commercial airliner. Am. J. Epidemiol. 110:1-6, 1979.

105. Muchmore, H. G., A. J. Parkison, J. E. Humphries, E. N. Scott, D. A. McIntosh, L. V. Scott, M. K. Cooney, and J. A. R. Miles. Persistent parainfluenza virus shedding during isolation at the South Pole. Nature 289:187-189, 1981.

106. Murray, A. L., and P. S. Lawrence. Sequelae to smoking cessation: A review. Clin. Psychol. Rev. 4:143-157, 1984.

107. Nastrom, G. D., J. D. Holdeman, and P. J. Perkins. Measurements of cabin and ambient ozone on B747 airplanes. J. Aircraft 17: 246-249, 1980.

108. National Council on Radiation Protection and Measurements. A Review of NCRP Radiation Dose Limit for Embryo and Fetus in Occupationally-Exposed Women. NCRP Report 53. Washington, D.C.: National Council on Radiation Protection and Measurements, 1977.

109. National Council on Radiation Protection and Measurements. Natural Background Radiation in the United States. NCRP Report 45. Washington, D.C.: National Council on Radiation Protection and Measurements, 1975.

110. National Research Council, Committee on Indoor Pollutants. Indoor Pollutants. Washington, D.C.: National Academy Press, 1981.

111. Newman, W. H., and M. R. Viele. Engine Bleed Air Reduction in DC-10. NASA-CR-159846. Long Beach, Cal.: Douglas Aircraft Company, 1980.

2022933485

Source: https://www.industrydocuments.ucsf.edu/docs/jmvl0000

112. Oakley, D. T. Natural Radiation Exposure in the United States. ORP/SID 72-1. Washington, D.C.: U.S. Environmental Protection Agency, Office of Radiation Programs, 1972.

113. Ostberg, O., and R. Mills-Orring. Cabin Attendants' Working Environment: A Questionnaire Study. Technical Report 180:74 T. Lulea: University of Lulea, Department of Human Work Sciences, 1980. (in Swedish)

114. Perkins, P. J., J. D. Holdeman, and D. J. Gauntner. Aircraft cabin ozone measurements on B747-100 and B747-SP aircraft: Correlations with atmospheric ozone and ozone encounter statistics. NASA TM-79060. Cleveland, Ohio: NASA Lewis Research Center, 1978.

115. Platts-Mills, T. A., F. Rawle, and M. D. Chapman. Problems in allergen standardization. Clin. Rev. Allergy 3:271-290, 1985.

116. Pregnancy Discrimination Act of 1978: An Act to Amend Title VII of the Civil Rights Act of 1964 to Prohibit Sex Discrimination on the Basis of Pregnancy. PL 95-555. U.S. Statutes at Large 92:2076-2077, 1978.

117. Pustinger, J. V., Jr., and F. N. Hodgson. Identification of Volatile Contaminants of Space Cabin Materials. AMRL-TR-67-58. Dayton, Ohio: Monsanto Research Corporation, 1967. (available from NTIS as N67-37551)

118. Quigley, S. Jet engine emissions. J. Ir. Med. Assoc. 65:258-262, 1972.

119. Rappaport, B. Z., T. Nelson, and W. H. Welker. The effect of low relative humidity at constant temperature on pollen asthma. J. Allergy 6:111-122, 1935.

120. Riley, R. L. Indoor airborne infection. Environ. Int. 8:317-320, 1982.

2022933486

Source: https://www.industrydocuments.ucsf.edu/docs/jmvl0000

121. Riley, R. L. Indoor spread of respiratory infection by recirculation of air. Bull. Physiopathol. Respir. 15:699-705, 1979.

122. Robinson, P. A., R. V. Tauxe, W. G. Winkler, and M. E. Levy. Respiratory illness in conference participants following exposure to rug shampoo. Infection Control 4:158-160, 1983.

123. Rogers, J. W. Results of FAA Cabin Ozone Monitoring Program in Commercial Aircraft in 1978 and 1979. FAA-EE-80-10. Washington, D.C.: U. S. Federal Aviation Administration, Office of Environment and Energy, 1980.

124. Sakuma, H., M. Kusama, S. Munakata, T. Ohsumi, and S. Sugawara. The distribution of cigarette-smoke components between mainstream and sidestream smoke. 1. Acidic components. Beitr. Tabakforsch. 12:63-71, 1983.

125. Sakuma, H., M. Kusama, K. Yamaguchi, T. Matsuki, and S. Sugawara. The distribution of cigarette-smoke components between mainstream and sidestream smoke. 2. Bases. Beitr. Tabakforsch. 12:199-209, 1984.

126. Sakuma, H., M. Kusama, K. Yamaguchi, and S. Sugawara. The distribution of cigarette-smoke components between mainstream and sidestream smoke. 3. Middle and higher boiling components. Beitr. Tabakforsch. 12:251-258, 1984.

127. Sandler, D. P., R. B. Everson, and A. J. Wilcox. Passive smoking in adulthood and cancer risk. Am. J. Epidemiol. 121:37-48, 1985.

128. Sandler, D. P., R. B. Everson, A. J. Wilcox, and J. P. Browder. Cancer risk in adulthood from early life exposure to parents' smoking. Am. J. Public Health 75:487-492, 1985.

129. Sandler, D. P., A. J. Wilcox, and R. B. Everson. Cumulative effects of lifetime passive smoking on cancer risk. Lancet 1:312-315, 1985. (preliminary communication)

2022933487

Source: https://www.industrydocuments.ucsf.edu/docs/jmvl0000

130. Schaefer, H. J. Comparative Evaluation of Exposure Distributions for Air Travelers and Radiation Workers. NAMRL-1159. Pensacola, Fla.: Naval Aerospace Medical Research Laboratory, 1972. (available from NTIS as AD-743482)

131. Schaefer, H. J. Radiation exposure on high-altitude passenger flights. Adv. Biol. Med. Phys. 13:153-206, 1970.

132. Schechter, M. S., and W. N. Sullivan. Gas-propelled aerosols and micronized dusts for control of insects in aircraft. II. Pesticide formulations. J. Econ. Entomol. 65:1444-1447, 1972.

133. Schievelbein, H., and F. Richter. The influence of passive smoking on the cardiovascular system. Prev. Med. 13:626-644, 1984.

134. Schmeltz, I., A. dePaolis, and D. Hoffmann. Chemical studies in tobacco smoke. 31. Phytosterols in tobacco: Quantitative analysis and fate in tobacco combustion. Beitr. Tabakforsch. 8:211-218, 1975.

135. Schoettlin, C. E., and E. Landau. Air pollution and asthmatic attacks in the Los Angeles area. Public Health Rep. 76:545-548, 1961.

136. Shabad, L. M., and G. A. Smirnov. Aircraft engines as a source of carcinogenic pollution of the environment [benzo(a)pyrene studies]. Atmos. Environ. 6:153-164, 1972.

137. Shephard, R. J., R. Collins, and F. Silverman. "Passive" exposure of asthmatic subjects to cigarette smoke. Environ. Res. 20:392-402, 1979.

138. Sheppard, D., W. L. Eschenbacher, H. A. Boushey, and R. A. Bethel. Magnitude of the interaction between the bronchomotor effects of sulfur dioxide and those of dry (cold) air. Am. Rev. Respir. Dis. 130:52-55, 1984.

2022933488

Source: https://www.industrydocuments.ucsf.edu/docs/jmvl0000

139. Smeaton, M. J., P. J. Slater, and P. Robson. Malaria from a "commuter" mosquito. Lancet 1:845-846, 1984. (letter)

140. Speer, F. Tobacco and the nonsmoker: A study of subjective symptoms. Arch. Environ. Health 16:443-446, 1968.

141. Spendlove, J. C., and K. F. Fannin. Source, significance, and control of indoor microbial aerosols: Human health aspects. Public Health Rep. 98:229-244, 1983.

142. Spengler, J. D., D. W. Dockery, W. A. Turner, J. M. Wolfson, and B. G. Ferris, Jr. Long-term measurements of respirable sulfates and particles inside and outside homes. Atmos. Environ. 15:23-30, 1981.

143. Stahl, W. H., Ed. Compilation of Odor and Taste Threshold Values Data. DS48. Philadelphia, Pa.: American Society for Testing and Materials, 1973.

144. Stewart, A., and G. W. Kneale. Age-distribution of cancers caused by obstetric x-rays and their relevance to cancer latent periods. Lancet 2:4-8, 1970.

145. Stewart, A., and G. W. Kneale. Changes in the cancer risk associated with obstetric radiography. Lancet 1:104-107, 1968.

146. Stewart, A., J. Webb, and D. Hewitt. A survey of childhood malignancies. Br. Med. J. 1:1495-1508, 1958.

147. Sullivan, W. N., R. Pal, J. W. Wright, J. C. Azurin, R. Okamoto, J. U. McGuire, and R. M. Waters. Worldwide studies on aircraft disinsection at "blocks away." Bull. WHO 46:485-491, 1972.

148. Thayer, W. W. Tobacco smoke dilution recommendations for comfortable ventilation. ASHRAE Trans. 88(2):291-306, 1982.

2022933489

Source: https://www.industrydocuments.ucsf.edu/docs/jmvl0000

149. Toxic and hazardous substances. Code of Federal Regulations, Title 29, Pt. 1910.1000. Washington, D.C.: U.S. Government Printing Office, 1985.

150. Trichopoulos, D., A. Kalandidi, L. Sparros, and B. MacMahon. Lung cancer and passive smoking. Int. J. Cancer 27:1-4, 1981.

151. U.S. Bureau of the Census. Statistical Abstract of the United States, 1985, 105th ed. Washington, D.C.: U.S. Government Printing Office, 1984.

152. U.S. Centers for Disease Control. Disinsection of aircraft. Federal Register 44(12 Oct.):58912, 1979.

153. U.S. Civil Aeronautics Board. Part 252 - Smoking Aboard Aircraft: Final Rule. Amendment 1 to Part 252. Docket 29044. Washington, D.C.: U.S. Civil Aeronautics Board, 1983.

154. U.S. Environmental Protection Agency. Air Quality Criteria for Particulate Matter and Sulfur Oxides. EPA-600/8-82/029a. 3 vol. Washington, D.C.: U.S. Environmental Protection Agency, 1982.

155. U.S. Environmental Protection Agency. Revised Evaluation of Health Effects Associated with Carbon Monoxide Exposure: An Addendum to the 1979 EPA Air Quality Criteria Document for Carbon Monoxide. EPA-600/8-83/033F. Washington, D.C.: U.S. Environmental Protection Agency, 1984.

156. U.S. Environmental Protection Agency, Environmental Criteria and Assessment Office. Air Quality Criteria for Ozone and Other Photochemical Oxidants: External Review Draft No. 2. Vol. V. EPA-600/8-84-020B. Research Triangle Park, N.C.: U.S. Environmental Protection Agency, Environmental Criteria and Assessment Office, 1985.

157. U.S. Federal Aviation Administration. Aircraft cabin ozone contamination: Advance notice of proposed rulemaking. Federal Register 42(6 Oct.):54427-54428, 1977.

2022933490

Source: https://www.industrydocuments.ucsf.edu/docs/jmvl0000

158. U.S. Federal Aviation Administration. FAA Aviation Forecasts, Fiscal Years 1985-1996. FAA-APO-85-2. Washington, D.C.: U.S. Federal Aviation Administration, 1985.

159. U.S. Federal Aviation Administration. Ozone Irritation During High Altitude Flight. Advisory Circular 00-52. Washington, D.C.: U.S. Federal Aviation Administration, 1977.

160. U.S. Federal Aviation Administration and U.S. National Institute for Occupational Safety and Health. Health Aspects of Smoking in Transport Aircraft. Cincinnati, Ohio: National Institute for Occupational Safety and Health, 1971. (available from NTIS as AD736097)

161. U.S. Surgeon General. Chronic Obstructive Lung Disease. DHHS (PHS) 84-50205. Washington, D.C.: U.S. Government Printing Office, 1984.

162. U.S. Surgeon General. The Health Consequences of Smoking: Cardiovascular Disease. Washington, D.C.: U. S. Government Printing Office, 1983.

163. Ventilation. Code of Federal Regulations, Title 14, Pt. 25.831. Washington, D.C.: U.S. Government Printing Office, 1985.

164. Vieillefond, H., P. Fourn, and R. Auffret. Characteristics in the atmosphere of long-range transport aircraft cabins. Aviat. Space Environ. Med. 48:503-507, 1977.

165. Wallace, R. W., and C. A. Sondhaus. Cosmic radiation exposure in subsonic air transport. Aviat. Space Environ. Med. 49:610-623, 1978.

166. Warhurst, D. C., C. F. Curtis, and G. B. White. A commuter mosquito's second bite? Lancet 1:1303, 1984. (letter)

167. Watkins, H. M. S. Epidemiologic investigations in Polaris submarines, pp. 9-53. In I. H. Silver, Ed. Aerobiology: Proceedings of the Third International Symposium on Aerobiology, University of Sussex, England, Sept. 1969. New York, N.Y.: Academic Press, 1970.

2022933491

Source: https://www.industrydocuments.ucsf.edu/docs/jmvl0000

168. Weber, R. Travel involving long-distance flights: health risks. Med. Monatsschr. Pharm. 7(5):147-151, 1984. (in German)

169. Weber, A., and T. Fischer. Passive smoking at work. Int. Arch. Occup. Environ. Health 47:209-221, 1980.

170. Weber, A., T. Fischer, and E. Grandjean. Passive smoking in experimental and field conditions. Environ. Res. 20:205-216, 1979.

171. Weber, A., T. Fischer, and E. Grandjean. Passive smoking: Irritating effects of the total smoke and the gas phase. Int. Arch. Occup. Environ. Health 43:183-193, 1979.

2022933492

Source: https://www.industrydocuments.ucsf.edu/docs/jmvl0000

HEALTH EFFECTS ASSOCIATED WITH EXPOSURE TO AIRLINER CABIN AIR

The survey of airliner cabin contaminants in Chapter 5 suggests a diverse set of adverse health effects that could arise from exposure to the cabin environment—from acute effects, such as irritation, inflammation, and infection, to long-term effects, such as neoplasms, reproductive disorders, and decrement in pulmonary function. The following sections review the epidemiologic literature on adverse health effects that have stemmed from cabin air, as manifested in passengers and crews of commercial airliners. Where it is relevant, we also include studies on general aviation and military aircraft crews.

Our review of the literature overlaps with that of Kraus,[33] who reviewed epidemiologic studies of health effects in commercial pilots and flight attendants. Although his review focused on occupational effects unrelated to cabin air quality, he did present original data on occupational illness that are relevant to our study. He used 1979 California statistics on occupational illness and injury to compare the reported numbers of illnesses and injuries in flight attendants with the numbers expected, which were based on combined overall percentage distributions for all occupations. Flight attendants' reported occupational illness is generally much less than expected, except for infection, disease of the inner ear, respiratory disease, and aerotitis media; for these, ratios of observed to expected frequencies range from 9.8:1 (infections) to 209.1:1 (aerotitis media). It seems that the latter conditions are occupationally induced, but we know of no further relevant analyses of occupational-illness statistics.

We found almost no studies of health effects in airliner passengers, other than a few isolated case

2022933493

Source: https://www.industrydocuments.ucsf.edu/docs/jmvl0000

reports of miscellaneous diseases. The one exception is a Danish retrospective study[47] of 773 airline passengers admitted to a Danish emergency ward from Copenhagen Airport in Kastrup in 1975-1976. The estimated annual turnover at that airport during the period was 8-9 million passengers. The most common illnesses were injury and poisoning (219 passengers), "symptoms, signs, and ill-defined conditions" (120), diseases of the circulatory system (67), diseases of the respiratory system (62), and infections and parasitic diseases (57). Many illnesses classed as "symptoms, signs, and ill-defined conditions" might have been related to the cabin environment, including hyperventilation, syncope and collapse, and ear problems; but it is not possible to attribute any of these illnesses or injuries directly to cabin air quality.

HEALTH EFFECTS OF CONCERN

IRRITATION AND INFLAMMATION

Passengers and cabin crew in an airliner can be exposed to a number of substances that can cause eye, nose, and respiratory irritation, which also appear to be commonly reported by passengers and crew when complaining about the air quality in airplanes. There has been relatively little evaluation of these symptoms among aircraft occupants.

A questionnaire survey of flight attendants in 1978 found a high prevalence of reported eye discomfort.[21 22] The survey form was distributed through the monthly magazine of the Association of Flight Attendants, which at that time represented flight attendants on 18 major airlines. Of the 774 who responded, 95% reported some eye discomfort while on an aircraft. Dry eyes and redness were reported by approximately 90% of the respondents; fewer reported other eye symptoms, such as blinking, blurred vision, and tearing. Over 90% reported smoking as a cause of their discomfort. Air-conditioning, cabin lights, wing reflection, and napping were also reported as contributing to eye problems. In general, the complaints were not correlated with the use of contact lenses, but attendants wearing soft contact lenses did report more problems with blurred vision and tearing. Although a high prevalence of eye discomfort

2022933494

Source: https://www.industrydocuments.ucsf.edu/docs/jmvl0000

was reported, the value of the study's conclusions is limited by the possibility of selection bias in the respondents to the survey and by the lack of a comparison group.

Three studies have attempted to evaluate symptoms due to ozone exposure on aircraft. In 1978, Reed et al., at the California State Department of Health, conducted a questionnaire study of flight attendants in three airlines: Pan American World Airways, which usually flew long distances at high altitudes; Pacific Southwest Airlines, which flew only short distances at lower altitudes; and Trans World Airlines, which flew both types of routes.[50]

Of questionnaires mailed to 3,280 flight attendants, 1,330 completed questionnaires were received. The authors estimated that 61% of flight attendants on active status returned questionnaires, which included questions on symptoms related to ozone exposure, on other risk factors, on characteristics of the flights, and on the time course of symptoms. Ozone exposures were believed to be much higher in the high-altitude long-distance flights. The prevalence of some symptoms possibly related to ozone exposure (chest pain, difficulty in breathing, and persistent cough) was significantly higher among the attendants on the high-altitude flights than among those in the other two airlines. No significant differences were found in the prevalence of other symptoms, such as extreme fatigue and back pain, which would not be expected to be caused by exposure to ozone. Flying on particular high-altitude aircraft (e.g., B-747 and B-747-SP, not equipped with a catalytic unit to abate ozone in the cabin air) was associated with symptoms of ozone toxicity. In general, this study found a higher prevalence of symptoms of ozone toxicity among flight attendants with higher exposures to ozone. Although limited by the response rate and the lack of direct ozone measurements, this study did indicate possible problems due to exposures during high-altitude long-distance flights.

Another questionnaire study of symptoms due to ozone exposure among flight attendants was conducted in 1977 by Tashkin et al., at the University of California, Los Angeles.[52] A questionnaire directed at flights on the B-747-SP was sent to 450 flight attendants in the Los

2022933495

Source: https://www.industrydocuments.ucsf.edu/docs/jmvl0000

Angeles area, of whom 248 responded; a questionnaire directed at flights on the B-747 was sent to the same 248 attendants and produced only 38 responses; and a similar questionnaire directed at both aircraft was sent to 850 attendants in the New York area, of whom only 65 responded. The questionnaire results were evaluated by three independent observers, who knew which aircraft the respondents had worked on and who graded symptoms on the basis of their possible relationship to ozone exposure. In addition, 21 flight attendants who had experienced severe respiratory symptoms while on B-747-SP aircraft received a more detailed medical evaluation, including pulmonary function testing, about 2 wk after the problem flight. The attendants who flew on the B-747-SP aircraft reported a higher prevalence of ozone-related symptoms (throat irritation, cough, difficulty in breathing, etc.) while on the aircraft than afterward and a higher prevalence than the attendants who flew on the standard B-747 in both the New York and Los Angeles portions of the study. The results of all the pulmonary function testing on the 21 selected participants were normal, as expected on the basis of time since exposure. Although it suggested that symptoms were due to ozone exposure, this study was limited by the lack of direct measurements of ozone exposure and by the very poor rate of response to the questionnaires, particularly in the comparison group.

A third study was performed by the Occupational Health Clinic of San Francisco General Hospital in 1984 at the request of the Independent Union of Flight Attendants.[30] The study was designed to see whether the prevalence of ozone-related symptoms reported by Reed et al.[50] persisted on long-haul, high-altitude flights and whether respiratory symptoms on these flights were associated with objective decreases in pulmonary function. The study consisted of two phases. In Phase I, all Pan American World Airways flight attendants based in San Francisco, London, or California were mailed a self-administered questionnaire concerning symptoms, medical diagnoses, smoking, and occupational history. Results of the questionnaire were compared with the data of Reed et al. A small selected group of flight attendants who noted ozone-related symptoms on the questionnaire were asked to participate in Phase II. For Phase II, each participant was instructed in the use of a Mini-Wright peak flow meter to measure peak

2022933496

Source: https://www.industrydocuments.ucsf.edu/docs/jmvl0000

expiratory flow rate (PEFR) and measured PEFR every 2 h while awake (total duration was not reported). Preflight (more than 12 h since last flight) and postflight (any time within 12 h of landing) PEFR measurements were then compared with unpaired t tests.

For Phase I, approximately 1,000 flight attendants were sent the survey; 280 returned completed questionnaires. A followup survey indicated that many nonrespondents failed to respond because their identity would not be protected. Demographically, the responding sample was similar to that of the Reed et al. sample, but older. Prevalence rates of chest pain or tightness (65%), shortness of breath (65%), and cough (57%) were similar to or slightly higher than those reported by Reed et al. Symptoms were more prevalent on B-747-SP flights and were more prevalent among those who had ever smoked than among nonsmokers.

Of the 20 flight attendants asked to participate in Phase II, only eight yielded analyzable data. Mean preflight PEFRs were always higher than postflight PEFRs, by 7-35 L/min (average, 21 L/min). The statistical analysis of the data is incorrect, so it is difficult to judge the statistical significance of these results. Two flight attendants had preflight-postflight differences in PEFR of over 20% in 24 h associated with long flights.

These results suggest that efforts to reduce onboard ozone concentrations have not had an effect on the prevalence of ozone symptoms and that flights might be accompanied by decreases in PEFR. Phase I had several limitations, including a lower response rate and an older population than the Reed et al. study, a self-administered questionnaire, and a lack of ozone measurements. Phase II was hampered by very small numbers, self-selection, use of flow meters with questionable accuracy, self-administered data collection, an ambiguous protocol for data collection (which allowed different persons to contribute different numbers of observations), a lack of ozone measurements in flight, and inappropriate data analysis. If these limitations are kept in mind, this study's conclusions can be regarded as only suggestive until confirmed by appropriately designed studies.

2022933497

Source: https://www.industrydocuments.ucsf.edu/docs/jmvl0000

In each instance of potential irritation and inflammation, passengers and crews with pre-existing disease or disorders of the organs affected suffer increased effects. People with upper respiratory infections suffer more from pressure changes and possibly from low humidity. People wearing soft contact lenses have more eye symptoms that result from low humidity. Patients with chronic pulmonary disease might have more symptoms from inhaling ozone. The medical literature discusses these increased susceptibilities, but does not document them.

Asymptomatic sinus disease has been the subject of a number of studies. One study[23] of 211 Air Force pilots aged 25-35 showed radiographic evidence of maxillary sinus abnormality in 25%, but no control group was studied. A followup study compared these Air Force pilots with two groups of Air Force employees who had no flying experience. One comparison group consisted of 100 new airmen trainees who were below age 25; the second consisted of 100 men aged 25-35 who were patients in an Air Force hospital for diagnostic procedures not related to ear, nose, or throat symptoms and had no flying experience. The prevalence of maxillary sinus abnormality among the two control groups was 26% and 29%, respectively. Another study[27] compared 1,284 asymptomatic flyers with a control group of 200 nonflyers. The reported prevalence of abnormalities of the paranasal sinuses was 22% in the control group and 15.6% in the flyers. Selection of the controls and comparability of the two groups were not reported.

Other conditions associated with mucous membrane inflammation have been found in airliner cabin occupants. Aerotitis media and other middle ear conditions have been reported as significant health problems for flight attendants.[33 55] These conditions might be due to cabin pressure changes, but mucous membrane inflammation could contribute to them.

INFECTION

Only one study has clearly documented the occurrence of an outbreak of infectious disease related to airplane use.[43] An outbreak of influenza occurred in 1978 in Alaska. Because of an engine malfunction, an airliner

2022933498

Source: https://www.industrydocuments.ucsf.edu/docs/jmvl0000

with 54 persons aboard was delayed on the ground for 3 h, during which the aircraft ventilation system was reportedly turned off. Within 3 d of the incident, 72% of the passengers became ill with influenza. One passenger (the index case) was ill while the aircraft was delayed. Serologic evidence of influenza infection was found in 20 of 22 passengers tested, and the virus was isolated from eight of 31 passengers whose serum was cultured. Documentation of this outbreak was assisted by the circumstance that all the passengers traveled to one small town and by the alertness of the local physician. Similar outbreaks could result from crowded flights with an infectious person and not be documented or noticed, because passengers would disperse after landing.

Persons with coincidental acute and chronic infections suffer more from superimposed infections acquired on the aircraft. In addition, increasing numbers of people with diminished resistance to infection might be traveling as passengers—specifically, patients undergoing chemotherapy or x-ray therapy for malignancies and those infected with the HTLV-III virus (acquired immune deficiency syndrome). There is no evidence that that virus can be transmitted through the air.

RESPIRATORY IMPAIRMENT

Various constituents of the aircraft environment could lead to respiratory impairment in passengers or crew. The manifestations of respiratory impairment are diverse and include pulmonary diseases, acute respiratory illness, sinus disease, sarcoidosis, and spontaneous pneumothorax.

Several studies have investigated pulmonary function in flight attendants or pilots. One report found that higher percentages of members of self-selected groups of Miami- and New York-based Pan American World Airways flight attendants, but not San Francisco-based flight attendants, had spirometric abnormalities than of an age- and sex-matched Michigan group.[44] The finding is difficult to interpret, because of the self-selection process, questions of comparability of measurements in the flight attendants and the Michigan group, and

2022933499

Source: https://www.industrydocuments.ucsf.edu/docs/jmvl0000

failure to take smoking history into account. Another study reported, as expected, an absence of pulmonary function abnormalities in a select group of 21 flight attendants who were tested 2 wk after experiencing respiratory symptoms during B-747-SP flights.[52]

A study of 257 active United Airlines pilots revealed that 12% had evidence of minimal to moderate ventilatory impairment.[18] Disease prevalence increased with age and smoking history, but no comparisons were made with a nonpilot population, so it is difficult to assess the importance of the finding. Similar findings have been reported for general aviation airmen.[37]

Dille[20] compared the prevalence of asthma, emphysema, bronchiectasis, bronchitis, and other unclassified pulmonary diseases in a population of 288,000 active civil airmen with the prevalence of these diseases reported in the U.S. National Health Survey and found a much higher prevalence in the general population. That was expected, because of the self-selection of active airmen. The long-term followup of the U.S. Navy's "1,000-aviator cohort" revealed that decrements in pulmonary function were associated with cigarette-smoking, coronary arterial disease, and weight gain.[38] No correlation was reported between a career in military aviation and the development of pulmonary disease; but a career in military aviation was a dichotomous variable, which was coded (present) if a person had 15 yr or more of flying history and not coded (absent) otherwise, and is at best a weak measure of exposure.

Several incidental reports have noted spontaneous pneumothorax in pilots, but presented no comparisons with nonpilot populations, so it is impossible to judge whether the risk is increased by a flying career or by onboard environmental conditions.[19 24 25]

One British investigation[11] has studied the prevalence of pulmonary lesions resembling sarcoid granulomata in 2,000 autopsy reports after 700 aviation accidents. Military crews had a higher rate than civil airmen, who had a higher rate than passengers or glider pilots. Review of the incidence of clinical sarcoidosis in the Royal Air Force in 1962-1977 showed a much greater overall incidence than the 3 per 100,000 in the general

2022293500

Source: https://www.industrydocuments.ucsf.edu/docs/jmvl0000

U.K. population; the air crew incidence averaged 14.4 cases per 100,000, and the ground crew, 10.8 cases per 100,000. Because of inconsistencies in the autopsy reports and clinical incidence rates and the lack of corroborating evidence, no conclusions were drawn by the author. This pathologic but often asymptomatic lesion needs to be searched for in other well-controlled studies.

Jasinski[31] showed acute respiratory illness to be a common problem in flight attendants, but it cannot be determined from the report whether the incidence was higher than that found in other populations. An Italian study[48] of morbidity in flying personnel appeared to suggest higher rates of acute respiratory illness than in nonflying airline employees, but the details of the study were not reported. The work by Kraus[33] cited earlier suggested higher rates of respiratory disease in flight attendants.

Isolated autopsy findings of hypoxia, intoxication, hyperventilation, and carbon monoxide intoxication in military pilots have been reported.[26 36 49] The relevance of these reports to the commercial airliner cabin environment is uncertain. One report[42] showed that contamination of the ventilation system (in military aircraft) with lubricating oil could lead to intoxication.

As noted earlier, patients with underlying pulmonary disease are more susceptible to changes in cabin air that affect pulmonary function. Thus, any increase in the partial pressure of carbon dioxide (pCO_2) in the air will adversely affect patients with chronic obstructive pulmonary disease (COPD) who are already functioning with an increased blood pCO_2 and increased alveolar pCO_2. A further increase might make it even more difficult to maintain a normal blood pH. Similarly, the decrease in oxygen partial pressure (pO_2) that occurs at 8,000 ft is safe for normal people, but possibly hazardous for patients with COPD. One study of patients with COPD who were placed at reduced pO_2 as they would be at 8,000 ft showed that patients without overt pulmonary failure can expect no trouble and that those with symptomatic COPD can be tested in advance by their physicians to determine whether they will need supplementary oxygen if they must fly.[51]

2022933501

Source: https://www.industrydocuments.ucsf.edu/docs/jmvl0000

CARDIOVASCULAR EFFECTS

The effects of cabin air quality on cardiovascular function in normal persons and patients with underlying disease are of interest. There is no evidence of any effects in people with normal hearts and blood vessels, other than occasional anecdotes of venous thrombosis and pulmonary embolism, which are much more likely to be associated with inactivity than with air quality. A high percentage of adults have some underlying coronary arterial disease, which theoretically could be made worse by the products of cigarette-smoking.[3 7-9] Although angina pectoris might result from myocardial ischemia, there is no evidence that myocardial infarction would be caused by inadequacies in cabin air quality.

The many papers on coronary arterial disease and resulting sudden death of pilots are not reviewed here, because they are concerned with screening and related health examinations, rather than with possible deleterious effects of cabin air.

Some persons with symptomatic cardiovascular disease are under medical care, so decisions about the possibly increased hazards of reduced pO_2 and exposure to cigarette smoke, carbon monoxide, and ozone could be made by their physicians.

NEOPLASMS

Several constituents of cabin air might increase the risk of neoplasia, including passive smoking and exposure to radiation. However, published reports contain little documentation of cancer incidence in flying personnel.

Kraus[33] reviewed Milham's study[41] of occupational mortality in Washington State, which gave proportional mortality ratios for many occupational categories, including pilots, navigators, and flight attendants. Statistically significant increases were seen in rectal cancer in pilots and navigators, but significant reductions in lung cancer. These observations have not been confirmed in other data bases.

In 1981, the Centers for Disease Control carried out a health hazard evaluation for the Independent Union of

2022933502

Source: https://www.industrydocuments.ucsf.edu/docs/jmvl0000

Flight Attendants (IUFA).[45] IUFA mailed a questionnaire to approximately 6,000 of its members. Responses were received from 9%; the reason for the low response rate is that a response was requested only if the member had cancer. Crude incidence and prevalence rates were compared with statistics from the Birmingham Regional and Connecticut Tumor Registries. Only skin cancer showed an excess risk among flight attendants: 3-10 times the expected rates. The possible environmental causes relevant to skin cancer are exposures to sunlight, ionizing radiation, arsenicals, and hydrocarbons. Although the results were suggestive, the study had clear limitations, including the possible failure of those who might have had cancer to respond, unconfirmed self-reported diagnoses, and lack of a control group.

Three case reports of nasopharyngeal cancer in bush pilots suggested that the cancers could be related to pressure changes,[5 6 54] but presented no substantiating evidence.

REPRODUCTIVE DISORDERS

A few studies on reproductive disorders or pregnancy outcome in flight attendants have been reported. Menstrual disorders are thought to be related primarily to stress and interruption of circadian rhythm, but there is some speculation that they can be attributed to solar radiation,[16] which might also predispose to unfavorable pregnancy outcome.

Cameron[14] presented data on menstrual function in 98 Swiss flight attendants. Long-term followup data on reproductive outcome were available on only 50 women. There was a general suggestion that no increase in menstrual disorders was associated with flying, but that the miscarriage rate among married ex-hostesses was high. Iglesias et al.[29] reported the results of interviews of 200 flight attendants who sought medical assistance for various clinical problems; 39% reported unfavorable changes in menstrual cycles 6-24 mo after beginning aeronautical service. Both these studies had problems of recall and self-reporting, lack of controls, self-selection, and small numbers of participants (particularly the long-term followup in the Cameron study), so no reliable conclusions can be drawn.

2022933503

Source: https://www.industrydocuments.ucsf.edu/docs/jmvl0000

A Czechoslovakian study[28] found a significantly higher percentage of pathologic pregnancies and deliveries in flight attendants after 2-7 yr of flying than in the general population. High rates of spontaneous abortion and premature delivery were also reported. Details of this study were not available to the Committee, but it does not appear to have used appropriate controls.

One study[34] compared pregnancy outcome in U.S. Air Force women with age- and time-matched civilian patients. Although the Air Force women had generally higher rates of perinatal death, low-birthweight babies, small-for-gestational-age babies, and prematurity, the differences were not statistically significant; there were several significant differences in risk factors, including nulliparity, race, and marital status. In addition, the duties of the Air Force women in this study varied, so they were not good surrogates for flight attendants.

MISCELLANEOUS

Mendez Martin[40] surveyed various Spanish studies that showed that urinary calculosis was a common disease of flight personnel, possibly attributable in part to their low-humidity environment. English-language reports on this problem are sparse.[32]

SUMMARY

The available information on the health of airliner crews and passengers stems largely from ad hoc epidemiologic studies or case reports of specific health outcomes, although occupational-health statistics have been used in at least one study. The conclusions that can be drawn from the available data are limited to a great extent by the self-selection of the subjects of studies, the lack of comparison groups, and a lack of exposure information. The major findings must be reviewed with this caveat in mind.

The one study that used occupational-health statistics[33] found that flight attendants had higher rates of respiratory disease, aerotitis media, infections, and diseases of the inner ear than other

2022933504

Source: https://www.industrydocuments.ucsf.edu/docs/jmvl0000

California workers. Although these findings are important, the Committee feels that they should be verified by using additional occupational-health statistics from different sources and periods. The lack of specific exposure information makes it difficult to attribute the high rates to cabin air quality. However, increased rates of aerotitis media in flight personnel have been documented in other studies.[55]

A higher prevalence of ozone-related (self-reported) symptoms was found in flight attendants on long, high-altitude flights than on short, low-altitude flights.[50] Despite some limitations in the study, it offered some evidence that ozone-related health problems exist among flight attendants. Results of another study[30] suggested that the prevalence of ozone-related symptoms continues to be high. Neither study correlated reported symptoms with direct onboard ozone measurements. To our knowledge, there have been no similar studies on passengers.

One epidemiologic study[43] documented that outbreaks of influenza can be associated with unusual operating conditions, but the incidence of such outbreaks is unknown, as is their dependence on operating conditions.

The literature on respiratory disease is sparse and fragmented and is of no value in assessing health effects associated with cabin air quality. Except for miscellaneous reports, there is no solid information on an association of neoplasia with cabin air quality.

The English-language reports on pregnancy outcome in flight attendants are flawed, and the Committee has not fully evaluated foreign-language reports that purport to show increased rates of unfavorable pregnancy outcome. The effect of cabin air quality in inducing unfavorable pregnancy outcome is also unknown.

Mendez Martin[40] has reported that urinary calculosis is common in flight personnel, but the Committee is aware of no corroboration of this finding.

2022933505

Source: https://www.industrydocuments.ucsf.edu/docs/jmvl0000

MONITORING AND SURVEILLANCE OF CREW AND PASSENGER HEALTH

Data on the health of passengers and crew have three potential sources: airlines, flight attendant unions, and FAA. The populations monitored can be conveniently divided into pilots, flight attendants, and passengers.

PILOTS

FAA requires medical certification of pilots every 6 mo and thus has considerable information on the health status of active civil airmen,[12] as well as statistics on medical disqualifications.[4 18] Because of this requirement and the expense of training pilots, many airlines routinely monitor the health status of their pilots.[46]

Several studies have looked at the health of pilots. Buley[13] and Kulak et al.[35] investigated cases of in-flight airline incapacitation, primarily with an eye to correlating such incidents with accidents and to determining whether stricter medical certification could reduce in-flight incapacitation. No attempt was made to relate incapacitation to specific occupational hazards or to contrast incidence rates with those in a comparison group. There has been one long-term followup study of mortality and morbidity in military pilots.[38] As one might expect, their health is better than that of the general population or of age-matched Framingham men, but there was no comparison with a suitably selected control group.

The extensive data available on the health of pilots are of little use in studying the health effects of cabin air. A primary limitation is that the special cockpit environment is not indicative of the general cabin environment. In addition, the orientation of health monitoring is to ensure that certified pilots are free of health problems that might jeopardize their ability to operate a plane safely; thus, its purpose is not to detect potential health effects of the working environment. For the system to meet the latter purpose, several important and fundamental changes would need to be made, including the addition of followup of retired airmen, elimination of self-selection problems (airmen

2022933506

Source: https://www.industrydocuments.ucsf.edu/docs/jmvl0000

who, for health reasons, elect not to renew their licenses do not appear in the current records), collection of additional data (on both health and exposure) pertinent to occupational hazards, and the implementation of a sophisticated statistical analysis and reporting system.

FLIGHT ATTENDANTS AND PASSENGERS

No monitoring or surveillance activities appear to be directed solely at the health of flight attendants. A few airlines indicated that some pre-employment health data were available to them and that some additional medical records on selected flight attendants were kept. However, these records are considered proprietary and were not available to the Committee. More important, it appears that no airline monitors the health of all its flight attendants routinely. Airlines do maintain records of workers' compensation and disability claims, but only a portion of these data can be released. A few airlines appear to keep records of employees' service histories (flight times, routes, and types of service).

A few airlines indicated that they maintain records on incidents of passenger illness (some limited only to oxygen use and passenger complaints about air quality), but the adequacy of these records for monitoring purposes is unknown.

Other than accident and incident data (see the following section), FAA collects no data on the health of flight attendants or passengers.

The flight attendant unions have periodically sponsored mail-questionnaire surveys on health-related issues, but do not sponsor routine data collection directed at monitoring the health of flight attendants.

The Association of Flight Attendants receives reports submitted by flight attendants concerning poor cabin air quality. From January 1977 to April 1982, 297 reports were received, and descriptive statistics were tabulated for presentation to the Subcommittee on Aviation of the U.S. Senate Committee on Commerce, Science, and Transportation. The value of these reports

2022933507

Source: https://www.industrydocuments.ucsf.edu/docs/jmvl0000

in assessing health risks is questionable, in that they appear to be voluntary and therefore self-selected. In addition, no standard protocol for reporting is used, so the information gathered is fragmentary and selective. The number of incidents reported per year from 1977 through 1982 varied erratically (21, 70, 6, 46, 135, and 66). In view of the number of flights per year, the reported incident rates seem low, although there might be some underreporting; there is no basis on which to establish an expected rate for these reports.[10]

FAA SURVEILLANCE ACTIVITIES

FAA has claimed regulatory jurisdiction over the cabin as a workplace. FAA asserts that its responsibility toward passengers is related to their safety and claims not to have regulatory authority over health. No federal agency monitors the health of flight attendants.

Other than the medical data collected for pilot certification (discussed above), the health data on passengers or flight crews that are systematically collected by FAA are very limited. They are reported in the Accident/Incident Data System (AIDS), described as follows in the AIDS user's guide:[53]

> The Accident/Incident Data System (AIDS) contains data records for general aviation accidents/incidents, air carrier incidents, and, beginning with 1982, air carrier accidents. The system consists of various data bases, computer hardware, computer programs and manual procedures which in combination produce a functional capability for the user. The system gives additional data elements, provides for English-like retrievals and reports, puts emphasis on ad hoc retrievals, provides easily utilized standard reports and provides user access through data terminals.
>
> The basic design of the AIDS system is to provide the user with current and accurate information about general aviation accidents and incidents coupled with the facility to produce "standard" reports and "ad hoc" reports based on specific requirements. Several standard report

2022933508

Source: https://www.industrydocuments.ucsf.edu/docs/jmvl0000

formats can be requested by specifying: time-period of interest, national/regional criteria, and event selection criteria (type of accident, etc.). Specialized queries can be prepared and input by trained users. Additionally, the tools exist for conducting statistical analyses of the data contained in the data base.

The objectives of AIDS are laudable, and the Committee is optimistic that the system will prove to be a valuable research aid for aviation safety. We were impressed by the documentation of the computer system designed to gain access to the data base and by the data coding system.

However, AIDS is relatively new and has yet to realize its full potential. The Committee experienced two difficulties in using the system. First, we were unable to find an accessible, concise, and thorough description of the collection system and its data base contents. Without good information on the data collection process, the Committee found it difficult to judge the quality of the data (for health monitoring purposes) and the desirability of using them for health monitoring. For example, the description of the criteria used for defining an accident or an incident in the FARs[39] is insufficient to enable one to be certain of the quality of health data that enter AIDS. In addition, the Committee found that, although access to the data base itself appears good, descriptive and summary statistics on such items as number of fires by cause and number of passenger deaths by cause were not readily accessible.

In summary, the Committee feels that AIDS has potential as a health monitoring or surveillance tool, but that considerably more effort by FAA will be required to make it effective. It is insufficient merely to collect data and provide access to them. It is important that at least basic statistical summaries of key information be produced routinely. The Committee also notes that the purpose of AIDS is to monitor accidents and incidents; therefore, in its current form it has no value for monitoring chronic health effects of air travel in passengers or crew.

2022933509

Source: https://www.industrydocuments.ucsf.edu/docs/jmvl0000

GROUPS AT INCREASED RISK

Aircraft at cruising altitudes maintain artificial cabin altitudes of 5,000–8,000 ft. Because of the associated decrease in pO_2 compared with that at sea level, passengers with specific health problems might be at increased risk while flying. A number of committees in special and general medical associations publish guidelines for physicians to use in advising patients about air travel.[1 17] Of most general coverage is a list, prepared by the American Medical Association's Commission on Emergency Medical Services, of conditions in which air travel is contraindicated.[2] The list is presented here for information, although the Committee found little material on these conditions in passengers traveling on aircraft.

- Cardiovascular—myocardial infarction within the preceding 4 wk, cerebrovascular accident within the preceding 2 wk, severe hypertension, decompensated cardiovascular disease, or any condition that restricts cardiac reserve. Patients with chronic cardiovascular problems, such as cyanotic congenital heart disease or coronary insufficiency, should have supplemental oxygen whenever flight altitude is greater than 22,500 ft.

- Bronchopulmonary—pneumothorax, congenital pulmonary anomaly, or vital capacity less than 50%. Patients with chronic pulmonary problems—such as cystic fibrosis, emphysema, chronic asthma, or fibrotic pulmonary conditions—should have supplemental oxygen whenever flight altitude is greater than 22,500 ft.

- Eye, ear, nose, and throat—recent eye surgery, acute sinusitis, or acute otitis media. Patients who must fly during the congestive stage of upper respiratory infection should use local shrinking agents or oral decongestants.

- Gastrointestinal—abdominal surgery within the preceding 2 wk, acute diverticulitis or ulcerative colitis, acute esophageal varices, or acute gastroenteritis.

2022933510

Source: https://www.industrydocuments.ucsf.edu/docs/jmvl0000

• Neuropsychiatric—epilepsy (unless it is well controlled medically and simulated cabin altitude is never greater than 8,000 ft), recent skull fracture, brain tumor, or history of violent or unpredictable behavior.

• Hematologic—anemia (hemoglobin concentration of less than 8.5 g/dL or red-cell count of less than 3 million/mm^3 in adults), sickle-cell disease (unless cruising altitude is never greater than 22,500 ft), or hemophilia.

• Pregnancy—beyond 240 d or if miscarriage is threatened.

• Miscellaneous—Scuba divers should not fly for at least 12 h after diving—24 h after repeated deep diving—before flying. The flight surgeon should be consulted if a patient requires intravenous fluids or special medical apparatus.

REFERENCES

1. Aerospace Medical Association, Committee on Medical Criteria. Medical criteria for passenger flying. Arch. Environ. Health 2:124-138, 1961.

2. American Medical Association, Commission on Emergency Medical Services. Medical aspects of transportation aboard commercial aircraft. JAMA 247:1007-1011, 1982.

3. Anderson, E. W., R. J. Andelman, J. M. Strauch, N. J. Fortuin, and J. H. Knelson. Effect of low-level carbon monoxide exposure on onset and duration of angina pectoris: A study in ten patients with ischemic heart disease. Ann. Intern. Med. 79:46-50, 1973.

4. Anderson, R., and C. C. Gullett. Airline pilot disability: Economic impact of an airline preventive medicine program. Aviat. Space Environ. Med. 53:398-402, 1982.

5. Andrews, P. A., and L. Michaels. Aviator's cancer. Lancet 2:640, 1968. (letter)

2022933511

Source: https://www.industrydocuments.ucsf.edu/docs/jmvl0000

6. Andrews, P. A. J., and L. Michaels. Nasopharyngeal carcinoma in Canadian bush pilots. Lancet 2:85-87, 1968.

7. Aronow, W. S. Aggravation of angina pectoris by two percent carboxyhemoglobin. Am. Heart J. 101:154-157, 1981.

8. Aronow, W. S. Effect of carbon monoxide on cardiovascular disease. Prev. Med. 8:271-278, 1979.

9. Aronow, W. S. Effect of passive smoking on angina pectoris. N. Engl. J. Med. 299:21-24, 1978.

10. Association of Flight Attendants. Exhibit A (passenger comments and flight attendant symptoms, 01/77-01/82). In U.S. Senate, Committee on Commerce, Science, and Transportation, Subcommittee on Aviation (97th Congress, 2nd Session). Airliner Cabin Safety and Health Standards: Hearing on S. 1770, May 20, 1982. Washington, D.C.: U.S. Government Printing Office, 1982.

11. Balfour, A. J. Sarcoidosis in aircrew. Aviat. Space Environ. Med. 53:269-272, 1982.

12. Booze, C. F., Jr. Health Examination Findings Among Active Civil Airmen. FAA-AM-84-8. Oklahoma City, Okla.: U.S. Federal Aviation Administration, Civil Aeromedical Institute, 1984.

13. Buley, L. E. Incidence, causes and results of airline pilot incapacitation while on duty. Aerosp. Med. 40:64-70, 1969.

14. Cameron, R. G. Effect of flying on the menstrual function of air hostesses. Aerosp. Med. 40:1020-1023, 1969.

15. Catlett, G. F., and G. J. Kidera. Detection of respiratory impairment in pilots. Aerosp. Med. 40:1251-1252, 1969.

2022933512

Source: https://www.industrydocuments.ucsf.edu/docs/jmvl0000

16. Cope, F. W. Idiopathic menstrual disorders in airline stewardesses: A possible origin from solar radiation of heavy magnetic particles. Int. J. Biometeorol. 25:219-221, 1981.

17. Cystic Fibrosis Foundation, Cardiovascular Committee. Airline travel for children with chronic pulmonary disease. Pediatrics 47:408-410, 1976.

18. Dark, S. J. Medically Disqualified Airline Pilots. FAA-AM-84-9. Oklahoma City, Okla.: U.S. Federal Aviation Administration, Civil Aeromedical Institute, 1984.

19. Dermksian, G., and L. E. Lamb. Spontaneous pneumothorax in apparently healthy flying personnel. Ann. Intern. Med. 51:39-51, 1959.

20. Dille, J. R. Pulmonary disease in general aviation. Aerosp. Med. 37:732-735, 1966.

21. Eng, W. G. Survey on eye comfort in aircraft. I. Flight attendants. Aviat. Space Environ. Med. 50:401-404, 1979.

22. Eng, W. G. Survey on eye comfort in aircraft. II. Use of ophthalmic solutions. Aviat. Space Environ. Med. 50:1166-1169, 1979.

23. Fascenelli, F. W. Maxillary sinus abnormalities. Arch. Otolaryngol. 90:190-193, 1969.

24. Flux, M., and J. R. Dille. Inflight spontaneous pneumothorax: A case report. Aerosp. Med. 40:660-662, 1969.

25. Fuchs, H. S. Incidence of spontaneous pneumothorax in apparently health aircrews. Aerosp. Med. 38:1286-1288, 1967.

26. Gibson, T. M. Hyperventilation in aircrew: A review. Aviat. Space Environ. Med. 50:725-733, 1979.

27. Hanna, H. H. Asymptomatic sinus disease in aircrew members. Aerosp. Med. 45:77-81, 1974.

2022933513

Source: https://www.industrydocuments.ucsf.edu/docs/jmvl0000

28. Hinst, J., and D. Bruchac. The influence of civil aviation upon the reproductive system of the woman. Cesk. Gynekol. 46:456-459, 1981. (in Czech)

29. Iglesias, R., A. Terres, and A. Chavarria. Disorders of the menstrual cycle in airline stewardesses. Aviat. Space Environ. Med. 51:518-520, 1980.

30. Independent Union of Flight Attendants. Flight Attendants Health Survey: Interim Report #1. San Francisco, Cal.: San Francisco General Hospital, Northern California Occupational Health Center, 1985.

31. Jasinski, D. R. Some health problems of women flight attendants in the Pacific. Hawaii Med. J. 39:39-42, 1980.

32. Kohler, F. P. Asymptomatic upper urinary tract lithiasis in flying personnel. J. Urol. 86:370-372, 1961.

33. Kraus, J. F. Epidemiological studies of health effects in commercial pilots and flight attendants: A review. Sangyo Ika Daigaku Zasshi 7(Suppl.):32-44, 1985.

34. Kruger, P. S. Risk factors and pregnancy outcome among Air Force women. Milit. Med. 144:788-791, 1979.

35. Kulak, L. L., R. L. Wick, Jr., and C. E. Billings. Epidemiological study of in-flight airline pilot incapacitation. Aerosp. Med. 42:670-672, 1971.

36. Lacefield, D. J., P. A. Roberts, and P. M. Grape. Carbon Monoxide In-Flight Incapacitation: An Occasional Toxic Problem in Aviation. FAA-AM-82-15. Oklahoma City, Okla.: U.S. Federal Aviation Administration, Civil Aeromedical Institute, 1982.

2022933514

Source: https://www.industrydocuments.ucsf.edu/docs/jmvl0000

37. Lategola, M. T., M. Flux, and P. J. Lyne. Spirometric assessment of potential respiratory impairment in general aviation airmen. Aviat. Space Environ. Med. 48:508-511, 1977.

38. MacIntyre, N. R., R. E. Mitchell, A. Oberman, W. R. Harlan, and A. Graybiel. Long-term follow-up of lung volume measurements in initially healthy young aviators. Aviat. Space Environ. Med. 52:1-5, 1981.

39. Mechanical reliability reports. Code of Federal Regulations, Title 14, Pt. 121.703. Washington, D.C.: U.S. Government Printing Office, 1985.

40. Mendez Martin, A. Urolithiasis among flight personnel. Med. Clin. (Barcelona):72:65-70, 1979. (in Spanish)

41. Milham, S., Jr. Occupational Mortality in Washington State, 1950-1979. NIOSH 83-116. Cincinnati, Ohio: National Institute for Occupational Safety and Health, 1983. (available from NTIS as PB-84-199769)

42. Montgomery, M. R., G. T. Wier, F. J. Zieve, and M. W. Anders. Human intoxication following inhalation exposure to synthetic jet lubricating oil. Clin. Toxicol. 11:423-426, 1977.

43. Moser, M. R., T. R. Bender, H. S. Margolis, G. R. Noble, A. P. Kendal, and D. G. Ritter. An outbreak of influenza aboard a commercial airliner. Am. J. Epidemiol. 110:1-6, 1979.

44. National Institute for Occupational Safety and Health. Flight Attendants Health Survey: Interim Report #1. HETA 81-331. Cincinnati, Ohio: National Institute for Occupational Safety and Health, 1982.

45. National Institute for Occupational Safety and Health. Independent Union of Flight Attendants: Interim Report #1. HETA 82-083. Cincinnati, Ohio: National Institute for Occupational Safety and Health, 1982.

2022933515

Source: https://www.industrydocuments.ucsf.edu/docs/jmvl0000

46. Orford, R. B. A critical review of the periodic examination of pilots at the Mayo Clinic 1939-1973 to determine the effectiveness of a comprehensive health maintenance program in an airline pilot population. (unpublished thesis, University of Minnesota, 1975)

47. Pilgaard, S., A. Koster, and D. Munck. Airline passengers admitted to an emergency ward: A 2-year follow-up study. Ugreskr. Laeger 141:499-502, 1979. (in Danish)

48. Polizzi di Sorrentino, A. Influence of flight and commercial piloting on morbidity of civil aviation personnel. Riv. Med. Aeronaut. Spaz. 32:42-62, 1969. (in Italian)

49. Rayman, R. B., and G. B. McNaughton. Hypoxia: USAF experience, 1970-1980. Aviat. Space Environ. Med. 54:357-359, 1983.

50. Reed, D., S. Glaser, and J. Kaldor. Ozone toxicity symptoms among flight attendants. Am. J. Ind. Med. 1:43-54, 1980.

51. Schwartz, J. S., H. Z. Bencowitz, and K. M. Moser. Air travel hypoxemia with chronic obstructive pulmonary disease. Ann. Intern. Med. 100:473-477, 1984.

52. Tashkin, D. P., A. H. Coulson, M. S. Simmons, and G. H. Spivey. Respiratory symptoms of flight attendants during high-altitude flight: Possible relation to cabin ozone exposure. Int. Arch. Occup. Environ. Health 52:117-137, 1983.

53. U.S. Federal Aviation Administration, Flight Standards National Field Office. Accident/Incident Data System--AIDS--User Guide. Washington, D.C.: U.S. Federal Aviation Administration, 1982.

54. Winter, P. M. Aviator's cancer. Lancet 2:285, 1968. (letter)

55. Wolf, C. R. Aerotitis in air travel. Calif. Med. 117(5):10-12, 1972.

2022933516

Source: https://www.industrydocuments.ucsf.edu/docs/jmvl0000

7

DESIRABILITY AND FEASIBILITY OF ADDITIONAL DATA COLLECTION

The available empirical evidence is of insufficient quality and quantity for a scientific evaluation of airliner cabin air or of the probable health effects of short or long exposure to it. The Committee believes that this situation should be rectified and that data should be collected on the quality of airliner cabin air and on its health effects on passengers and crew.

There is a lack of definitive data showing relationships between airliner cabin air quality and health problems, except symptoms (chest pain, difficulty of breathing, and persistent cough) presumably associated with high ozone concentrations. Data are lacking because adequate studies have not been performed.

Several previous chapters have addressed the information relevant to the assessment of potential health risks associated with airliner cabin air: Chapter 2 described the systems for controlling cabin air, Chapter 5 described contaminants and special conditions of cabin air and the health effects usually associated with them, and Chapter 6 reviewed available evidence on the manifestation of health effects in crew or passengers. This chapter addresses the desirability and feasibility of collecting data that could be used to evaluate the quality of airliner cabin air and health effects associated with it. A start at modeling the most important factors that affect pollutant concentrations and flows on aircraft may be found in Appendix A. However, further model development and verification require a variety of additional data.

2022933517

Source: https://www.industrydocuments.ucsf.edu/docs/jmvl0000

GENERAL CONCEPTS AND APPROACHES

The Committee has identified several potential sources of environmental quality problems on aircraft, including reduced air pressure, low humidity, ozone, cosmic radiation, and air contaminants, such as microbial aerosols. Although these factors are found in other environments as well, their combination in the aircraft cabin constitutes an environment whose uniqueness makes it difficult to draw valid conclusions on the basis of data on other environments. Although both the limited data available and calculations based on aircraft design and engineering information suggest that cabin air is probably no worse than air in many other confined environments, such a conclusion must remain speculative until valid measurements are made in the airliner cabin environment. The Committee believes that it is of paramount importance to measure characteristics of cabin air, to determine how they compare with conditions that cause problems in other environments.

Simply measuring the contaminants and other relevant variables of the airliner cabin does not address the question of the likely health effects of short or long exposure to that environment. The evaluation of the health effects of exposure requires the collection and interpretation of data very different from those on exposure. Furthermore, because it is difficult to detect and measure such effects, it is generally necessary to rely on measures that indicate or are related to the health effects of concern. The collection of data must be discussed with respect to four interrelated issues: potential causes of diminution in air quality, potential health effects of diminished air quality, actual examples of such effects, and surrogate measures of the effects where direct measurement is not possible. Extensive data on the operation and maintenance of aircraft have already been collected. The existing mechanisms of data collection should be examined to determine whether they can be used to satisfy these new needs.

Several parts of the federal regulations governing commercial air carriers[2] specify records and reports that commercial operators and air carriers must keep and submit to FAA. They include mechanical reliability reports describing the occurrence or detection of each

2022933518

Source: https://www.industrydocuments.ucsf.edu/docs/jmvl0000

failure, malfunction, or defect that endangers the safe operation of an aircraft.[4] Each certificate holder must submit a report covering each 24-h period to the FAA maintenance inspector assigned to its operations. In addition, summary reports on mechanical interruptions, alterations, and repairs must be submitted regularly,[1 3] and an airworthiness log kept on each aircraft must record all work performed on it, including maintenance, preventive maintenance, and alterations. Given the large numbers of aircraft in the fleets and the numbers of flights each day, these requirements generate a tremendous amount of data that provide a precise record that can be examined when accidents occur.

These data are entered into computerized storage and retrieval systems like the FAA Accident/Incident Data System (AIDS) and Service Difficulty Reports. However, such unfocused collection of information about almost anything that happens to each aircraft is difficult to use. Unless the data are classified according to relevant categories, it is very difficult to retrieve them in a way that is useful to answer the question under consideration. The FAA data collection and storage systems are oriented toward mechanical interruptions and accidents or incidents involving potential damage or injury, and the Committee has found the vast data collected by FAA to be of little use in assessing the quality of air in airliner cabins or the potential health consequences of exposure to it. The Committee suggests that consideration be given to adapting this data collection system to include collection of data relevant to the assessment of cabin air quality.

The potential health effects of cabin air considered by the Committee to be of greatest concern are reproductive effects, chronic pulmonary disease, chronic heart disease, cancer (including leukemia), and infectious disease. These effects are often hard to detect, measure, and attribute to specific causes. The numerous reasons include the lack of baseline observations on most persons who fly, the lack of equivalent groups with which to compare them, difficulties of measuring individual exposures, ethical constraints on and practical infeasibility of experimentation with various characteristics of cabin air, imprecision of signs and symptoms of acute effects (such as chest tightness), and the rarity of most effects of concern.

2022933519

Source: https://www.industrydocuments.ucsf.edu/docs/jmvl0000

The Committee has identified several measures that are related to the health effects of concern, including reproductive function (e.g., abortion and birth-defect rates), pulmonary function (e.g., chronic obstructive pulmonary disease and disability), myocardial-infarction rates, use of onboard medical kits, and concentrations of specific contaminants (ozone, cosmic radiation, carbon monoxide, respirable suspended particles, and microorganisms). However, none of these measures has a one-to-one relationship with any of the health effects of concern, and most of the effects have several sources. Furthermore, data collected on health effects in airliner passengers or cabin crew will be extremely difficult to interpret, because of the difficulty of determining appropriate control groups. We know that the socioeconomic profile of the typical airline passenger is different from that of the general public, so we cannot be certain that the health effects observed in airline passengers are different from those in nonflyers, until they are compared with those in a similar group of nonflyers.

Despite these difficulties, the Committee concludes that appropriate data collection is not only possible, but highly desirable. The following sections describe the Committee's recommendations for research on airliner cabin air quality, the health effects of exposure to the cabin environment, and other topics.

MEASURES OF AIRLINER CABIN AIR QUALITY

The principal air quality problems on aircraft involve tobacco smoke, ozone, cosmic radiation, humidity, and microbial aerosols. Because ventilation rate and cabin pressure are the controlling factors for cabin air quality, actual ventilation rates should be measured under routine flight conditions in all types of commercial aircraft. The factors that influence pollutant concentrations and distribution within the cabin should be carefully considered, as well as the requirement of measuring concentrations over small spatial and temporal spans. If significant variations are found in an initial study, continual monitoring should be instituted.

2022933520

Source: https://www.industrydocuments.ucsf.edu/docs/jmvl0000

Ozone is virtually the only source of degradation in air quality of which extensive measurements in aircraft have been reported. Exposure to ozone is regulated. Compliance can be achieved either through installation of filtration equipment (generally a catalytic converter), through the routing of flights so as to avoid areas of high ozone concentration (as detected by satellite), or through the choice of flight altitudes below those at which ozone is highly concentrated. The Committee feels that an evaluation of cabin air quality would be incomplete without a determination of the degree of compliance and the ozone concentrations to which passengers and cabin crew are exposed. The Committee accordingly recommends that FAA analyze cabin ozone concentrations. The analysis need not involve permanent monitoring, but should include sufficient data to provide a statistically representative sample of aircraft types, routes, and other factors relevant to the alternative ways of complying. Studies could be conducted in altitude chambers to determine whether ozone and the hypoxia induced by cabin pressurization to the equivalent of an 8,000-ft altitude are associated.

Exposure to cosmic radiation is a matter of concern. The Committee feels that FAA should periodically review flight routes and altitudes, to assess their implications for exposure to cosmic radiation. Regular representative sampling should be performed to estimate the exposure of the flying public. A special effort should be made to alert the medical profession to the hazards to groups that might be at increased risk, such as pregnant women and patients receiving particular medical therapy. Those who live at high altitudes should perhaps avoid further chronic exposure to cosmic rays in high-altitude flights. But such decisions require more reliable data than are available on the effects of chronic exposure to cosmic rays on the long-term incidence of neoplastic disease. Because routes change, FAA should measure exposure to cosmic rays on a representative sample of current flights.

The Committee strongly recommends that, so long as smoking is permitted in airplanes, the Congress mandate a program to monitor onboard carbon monoxide and respirable suspended particles. The Committee believes that, except for emergency situations involving fire, the most pervasive threat to airliner cabin air quality

2022933521

Source: https://www.industrydocuments.ucsf.edu/docs/jmvl0000

is cigarette smoke. Carbon monoxide and respirable suspended particles are two components of environmental tobacco smoke that are relatively easily measured, but the only empirical data have been collected on an ad hoc and nonrepresentative basis. There is a deficiency of information regarding hypoxia, which might result from synergism between altitude effects (decreased partial pressure of oxygen) and formation of carboxyhemoglobin (due to increased molar concentration of carbon monoxide). Studies are beginning to evaluate this interaction, but at higher ambient carbon monoxide concentrations than reportedly occur in the aircraft cabin. Patients with cardiorespiratory problems might be at greater risk, as might cabin attendants who must work and rest in these conditions.

Many people believe that one is more likely to catch cold or contract a respiratory infection in an airplane than in most other common environments, but no evidence has been produced to establish this. In view of the degree of expressed concern about microbial contamination in aircraft and the possibility that serious acute health effects could result from such contamination, it is important to collect baseline data on background concentrations of microbial aerosols during normal flight conditions. It is also important to collect data on microbial aerosols in aircraft with known emission sources and under conditions of decreased ventilation. The Congress should authorize and appropriate funds for studies to measure volumetrically bioaerosol concentrations and associated variables in aircraft in flight—such as temperature, relative humidity, ventilation rate, filtration modes, and number of passengers on board—and bioaerosol concentrations in intake air in aircraft on the ground.

The purpose of gathering data on the various potential contaminants of airliner cabin air is to compare the concentrations measured with those believed to cause health problems in other environments. Even though the combination of environmental conditions found on aircraft is unique, such comparisons can identify possible problems, which can then be examined in greater detail.

2022933522

Source: https://www.industrydocuments.ucsf.edu/docs/jmvl0000

MEASURES OF HEALTH EFFECTS

The previous section identified several potential contaminants of airliner cabin air on which the Committee recommends collection of additional data. As pointed out earlier in this chapter, data on the potential health effects of these contaminants in the airliner environment must also be collected, but they must be collected and interpreted in ways that differ considerably from those for data on the contaminants.

The Committee attempted to identify measures for each of the health effects of concern: reproductive effects, chronic obstructive pulmonary disease, chronic heart disease, cancer, and infectious disease. However, direct measurement of these health effects is often not possible; therefore, collection of data on a series of suggestive measures is recommended.

Appropriately designed studies of selected health effects among crew members would be useful and ought to be performed, but finding valid comparison groups will be more difficult than in other industrial epidemiologic studies. For example, comparing disease rates of male employees in a particular factory with rates in the general population usually shows the workers to be healthier, because the total population includes all sick people. It might be better to compare the workers in one factory with those in another. But it is not possible to determine from the data on health alone which group of workers is exposed to the greater risk. That requires accompanying measures of exposure as well. Data on health effects of airliner cabin air in passengers pose even more problems, because relatively little is known about the characteristics of the flying public and it is not clear how to identify an equivalent group of people who do not fly. Even though the relevant characteristics of cabin crews are much better known, it is still difficult to find a group of nonflyers or infrequent flyers with whom appropriate comparisons can be made.

The Committee feels that, given the nature of the exposures and resulting health effects and the special occupational setting, it is unrealistic to expect that feasible epidemiologic studies will be able to determine conclusively the health hazards associated with exposure

2022933523

Source: https://www.industrydocuments.ucsf.edu/docs/jmvl0000

to airliner cabin air. Nevertheless, even though such studies cannot prove the degree of hazard associated with such exposure, they can produce data that are suggestive and that identify potential problems for further analysis.

The Committee recommends studies to examine rates of spontaneous abortion and birth defects among cabin crew members. Cabin crew members are subject to longer exposure than the flying public in general, and in examining reproductive effects it is not necessary to wait many years for chronic effects to emerge. In addition, reproductive effects are often sensitive indicators of other effects that are more difficult to measure. The only way to determine with accuracy whether the observed reproductive effects were due to exposure during flight, as opposed to exposure in the home or exposure to other personal variables, would be to assign new employees at random to cabin crews, as opposed to, say, work at ticket counters. The rates exhibited over time by the two groups would then be directly compared, to assess the reproductive hazards of exposure during flight. Such random assignment of employees is not practical. In lieu of it, comparisons would need to be made with several groups of similar ages, places of residence, family status, and other characteristics. Even then, the results could be considered only suggestive, and more detailed examinations would be required if problems were revealed. Care would need to be exercised to ensure that the groups examined were large enough to permit statistically significant analyses, and it could prove extremely difficult to find groups that include enough people with appropriate characteristics. In addition, careful measurements of exposure (or appropriate surrogates) should be made. Despite the difficulties in interpreting results, the Committee recommends that a feasibility study be undertaken to determine whether these conditions can be met.

The Committee feels that it is important to test pulmonary function among crew members and perhaps among selected passengers. In particular, chronic obstructive pulmonary disorders and pulmonary disability should be identified. The Committee feels that both flow-loop volume tests and forced expiratory volume (FEV) tests should be used. Flow-loop tests require more

2022933524

Source: https://www.industrydocuments.ucsf.edu/docs/jmvl0000

sophisticated computer equipment and are less susceptible to intentional or unintentional manipulation by subject or observer. However, FEV tests have been used successfully in many epidemiologic studies and would permit comparison with results under other conditions. Flight attendants have consistently reported respiratory effects, probably because their activity is greater than that of passengers. Studies in which subjects are exposed to ozone and carbon monoxide clearly indicate that the combination of exposure and increased exercise results in increased effects on cardiopulmonary function. The Committee feels that data concerning effects on pulmonary function would be vital in evaluating the health effects of airliner cabin air and recommends that appropriate before-and-after testing be undertaken.

It is difficult to determine an appropriate approach to the gathering of data on the incidence of myocardial infarction associated with air travel. The onset of myocardial infarction might be a response more to the stress of flying than to exposure to cabin air. Furthermore, the period at hazard may extend from before boarding to after deplaning. Most large airports have emergency medical facilities of some sort, so it might be possible to gather data on the incidence of myocardial infarction in or near airports and compare that incidence with the incidence during flight. The Committee feels that such a study is important enough to require a feasibility study to determine whether accurate data in sufficient quantity could be collected.

Measures for cancer are impractical, because of the long period of latency between exposure and onset. Although shorter, the incubation period for most infectious diseases precludes development of measures of them as well. However, from the standpoint of occupational health, it is entirely feasible and important to undertake a prospective monitoring of exposures and eventual mortality based on the National Death Index.

OTHER SUBJECTS

On January 9, 1986, FAA published a final rule requiring an approved medical kit to be carried on all passenger flights, training to familiarize crew members

2022933525

Source: https://www.industrydocuments.ucsf.edu/docs/jmvl0000

with the kit, and the reporting to FAA of each medical emergency during flight that results in use of the kit for the first 24 mo after the effective date of the rule.[5] The Committee recommends that FAA—in conjunction with physicians, statisticians, and epidemiologists—establish a clear protocol for reporting data on the use of emergency medical kits. If collection procedures are properly designed, the resulting data can be analyzed to identify the pattern of medical incidents during flight and to compare these patterns with the incidence of emergencies in other settings.

The Committee also feels that it would be advisable to monitor scientific literature relevant to various aspects of airliner cabin air quality or its health effects. Available computer-based bibliographic databases, such as MEDLINE, could be easily and inexpensively searched regularly to identify new scientific developments relevant to the topics addressed in this report.

REFERENCES

1. Airworthiness release or aircraft log entry. Code of Federal Regulations, Title 14, Pt. 121.709. Washington, D.C.: U.S. Government Printing Office, 1985.

2. Certification and operations: Domestic, flag and supplemental air carriers and commercial operators of large aircraft. Code of Federal Regulations, Title 14, Pt. 121. Washington, D.C.: U.S. Government Printing Office, 1985.

3. Mechanical interruption summary report. Code of Federal Regulations, Title 14, Pt. 121.705. Washington, D.C.: U.S. Government Printing Office, 1985.

4. Mechanical reliability reports. Code of Federal Regulations, Title 14, Pt. 121.703. Washington, D.C.: U.S. Government Printing Office, 1985.

5. U.S. Federal Aviation Administration. Emergency medical equipment: Final rule. Federal Register 51(Jan. 9):1218-1223, 1986.

2022933526

Source: https://www.industrydocuments.ucsf.edu/docs/jmvl0000

Appendix A

A COMPUTER MODEL FOR ASSESSING AIRLINER CABIN AIR QUALITY

Full understanding of cabin air quality requires, among other things, the monitoring of various pollutant concentrations. That is difficult and costly, because so many different pollutants require different monitoring devices and protocols. It would not be cost-effective to study all possible pollutants, although similarities in the sources and sinks of some pollutants would eliminate the necessity of monitoring all of them, and some pollutants are likely to be present in such low concentrations as to be unmeasurable and unimportant with respect to health or welfare.

The prohibitive cost of an extensive monitoring program suggests that we look for a different approach to assessing cabin air quality. A model of cabin air quality could serve adequately as an investigative tool. An accurate, validated model could be used to pinpoint potential problems and to study the sensitivity of pollutant concentrations to various control measures. The costs associated with control methods can be estimated with a separate model. With the results of modeling pointing the way, the attack on the problem could be more focused.

CONCEPTUAL DEVELOPMENT

The model must account for the important aspects of cabin air quality. It must be flexible enough to be used for various types of pollutants with different source profiles, temporal patterns, and health implications. It must be accessible to persons unfamiliar with mathematical or computer modeling. In fact, the details of the model need not be known to the user; only the outcome need be analyzed.

2022933527

Source: https://www.industrydocuments.ucsf.edu/docs/jmvl0000

The question to be answered is simply stated: Given a few external characteristics, estimate the concentration of a pollutant in the cabin. Several physical characteristics are available to the modeler. Aircraft volumes and air-movement systems are well defined. Ventilation of the cabin is an energy-using process, the engineering designs are well optimized, and data are available. Information on air recirculation and filtering is also available, as is information on the source strengths of some of the pollutants, such as carbon dioxide and water vapor from humans, tobacco smoke, and ozone. Less is known about others, such as volatile organic compounds emitted from materials, insecticides, or cleaning agents.

Other input data for the model are not readily available. These include information on air-mass movements between compartments in the cabin, rates of loss of reactive chemicals, and chemical deposition rates. These qualities can be estimated, but an effective model must include the ability to perform sensitivity analyses for them. Ideally, it should be possible to perform sensitivity analyses as the need arises for all quantities on which little information is available or for which design specifications are not met.

Once the potential input data are known, selection of a model type can begin. The most appropriate type of model for this application should be based on the general mass-balance approach. All mechanisms for production and loss of the pollutant are accounted for properly, and the change in concentration per unit time is the difference between the two:

$$dC/dt = P - LC, \qquad (1)$$

where C = concentration of pollutant,

t = time,

P = rate of production of pollutant, and

L = rate of loss of pollutant.

At equilibrium, $dC/dt = 0$—production rate equals loss rate. Solving for the concentration gives:

$$C = P/L. \qquad (2)$$

2022933528

Source: https://www.industrydocuments.ucsf.edu/docs/jmvl0000

Note that the ratio 1/L is a measure of the lifetime of the exponential approach to equilibrium. Small rates of loss imply a slow approach to equilibrium; large rates of loss suggest that equilibrium will be established rapidly and will prevail.

Figure A-1 is a schematic of a single component of a multibox model of an aircraft. The model consists of essentially separate boxes, each containing its own production and loss mechanisms. Production mechanisms include pollutant presence in circulating air (R_i) and local source (S_i). Potential production mechanisms from reactive chemistry can be added, although they are probably unimportant. Loss mechanisms include leakage (L_i), main recirculating flow (F_i), and first-order losses from deposition or other processes (K_i). An assumed local equilibrium is established in each. A degree of communication is established between adjacent boxes only because of the presence of small forward and backward airflow terms (f_i and b_i). These terms act as additional loss mechanisms for the box in question, whereas terms from adjacent boxes act as production mechanisms.

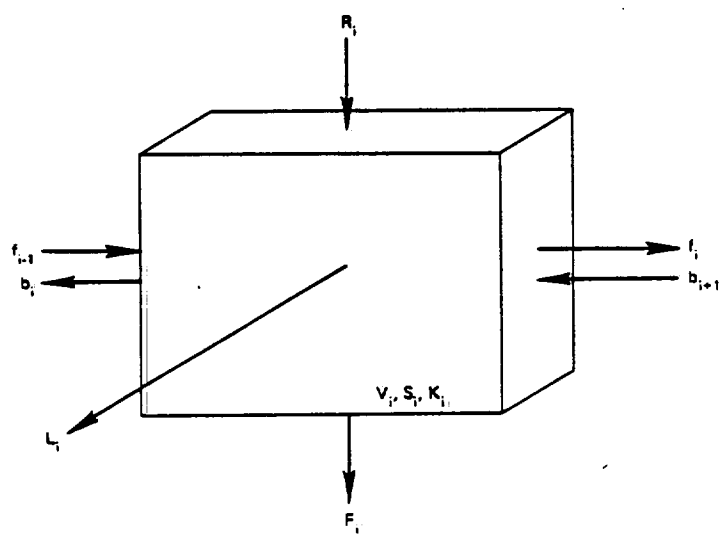

FIGURE A-1 Schematic of single component of multibox model of aircraft cabin air quality. See text for explanation of symbols.

2022933529

Source: https://www.industrydocuments.ucsf.edu/docs/jmvl0000

The cabin itself is coupled to another system within the aircraft, the air cleaning system. Figure A-2 is a schematic of the aircraft as a whole. Note that the cabin can be considered to be a single compartment (box 0), with polluted air leaving the cabin (F) and entering the air cleaning system. There a portion of the polluted air (E) is exhausted, and the remainder is filtered, mixed with ambient makeup air (m), and returned to the cabin (R) as the supply air. Conservation of mass requires that F + L + E = m + R, where L is the amount leaked from the cabin to the atmosphere.

More complicated systems require more complicated analysis. If all pollutants are generated in one place, but other places are of interest, more boxes are needed to describe the system. As the system becomes more

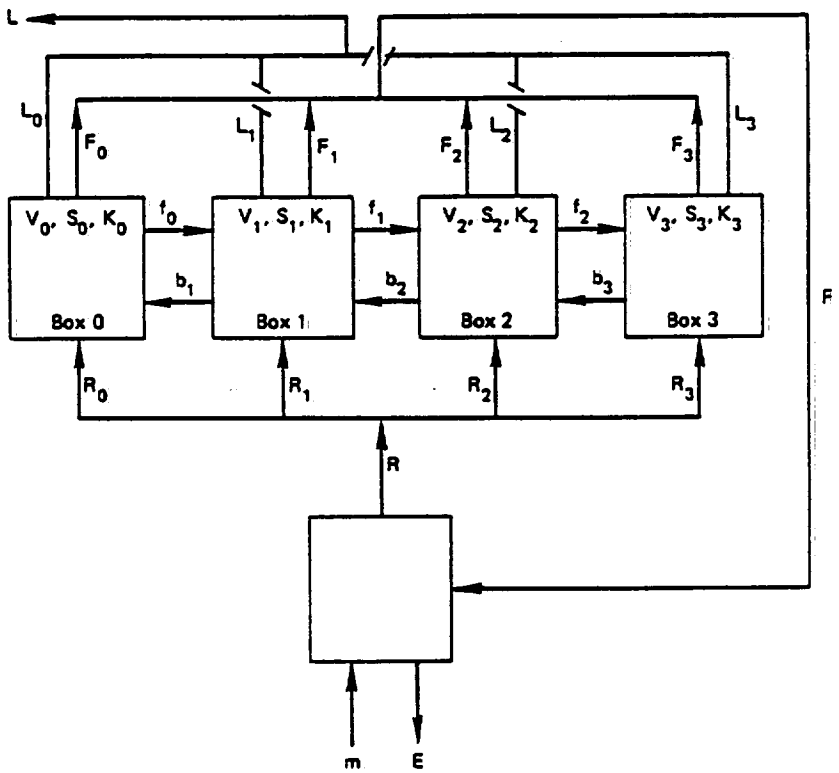

FIGURE A-2 Schematic of aircraft with air cleaning system. See text for explanation of symbols.

2022933530

Source: https://www.industrydocuments.ucsf.edu/docs/jmvl0000

complex, more information is needed for the model. Data on exchange of air from one box to another must be obtained. Analysis of the results also becomes more complex. Figure A-3 illustrates the detailed physical model schematically. In this case, four of the detailed boxes are coupled within the cabin. Note that no forward flow (f_i) is allowed out of the foremost compartment, nor is any backward flow (b_i) allowed out of the rearmost compartment. This physical model is very general. Each compartment can have any volume (V_i) deemed appropriate. Preferential flow can be effected by manipulating the relative magnitudes of f_i and b_i. Differential source strengths can also be implemented. Additionally, control strategies and their economic impacts can be investigated.

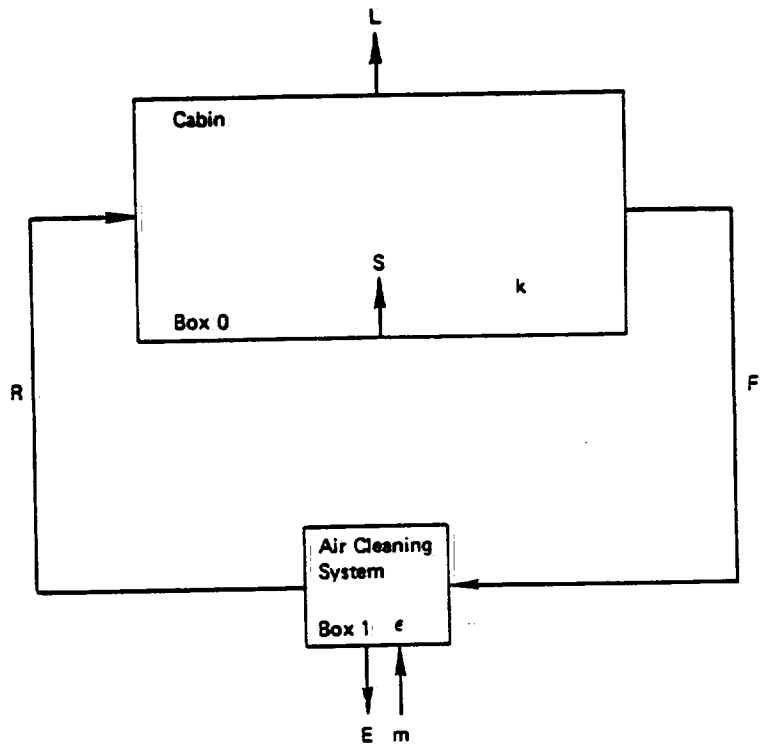

Restriction: F + L + E = m + R

FIGURE A-3 Schematic of coupled components for multibox model of aircraft cabin air quality. See text for explanation of symbols.

2022933531

Source: https://www.industrydocuments.ucsf.edu/docs/jmvl0000

MATHEMATICAL DEVELOPMENT

The determination of the concentrations in each of the compartments in the model described above requires the simultaneous solution of coupled, first-order linear differential equations obtained from Equation 1. At equilibrium, the solution is easily cast into the form of a matrix equation. Because of the nature of the physical model—i.e., interaction of adjacent boxes only—the mathematical form is tractable. Solutions can be obtained quickly and accurately for a large number of interacting boxes.

To describe the system, start with an expansion of Equation 1 for the ith box.

$$\frac{dC_i}{dt} = \frac{S_i}{V_i} + \frac{R_i}{V_i} + \frac{f_{i-1}}{V_i} - \frac{1}{V_i}(L_i + f_i + b_i + F_i) + K_i \tag{3}$$

The restrictions on f_i and b_i apply. At equilibrium, all dC_i/dt vanish, and the matrix equation becomes (for a four-compartment case):

$$\begin{bmatrix} \frac{1}{V_0}(L_0 + f_0 + F_0) + K_0 & -\frac{b_1}{V_0} & 0 & 0 \\ -\frac{f_0}{V_1} & \frac{1}{V_1}(L_1 + f_1 + F_1) + K_1 & -\frac{b_2}{V_1} & 0 \\ 0 & -\frac{f_1}{V_2} & \frac{1}{V_2}(L_2 + f_2 + F_2) + K_2 & -\frac{b_3}{V_2} \\ 0 & 0 & -\frac{f_2}{V_3} & \frac{1}{V_3}(L_3 + f_3 + F_3) + K_3 \end{bmatrix} \begin{bmatrix} C_0 \\ C_1 \\ C_2 \\ C_3 \end{bmatrix}$$

$$= \begin{bmatrix} \frac{1}{V_0}(S_0 + R_0 C_r) \\ \frac{1}{V_1}(S_1 + R_1 C_r) \\ \frac{1}{V_2}(S_2 + R_2 C_r) \\ \frac{1}{V_3}(S_3 + R_3 C_r) \end{bmatrix} \tag{4}$$

where C_r represents the concentration of pollutant in the recirculated air. This system has a tridiagonal form and can be solved efficiently with LU factorization. The coupled cabin and air cleaning system is solved first, with an explicit solution of the two-by-two form.

2022933532

Source: https://www.industrydocuments.ucsf.edu/docs/jmvl0000

OPERATING PROCEDURES

The cabin air quality simulation model Cabinair is designed to be user-friendly and self-documenting. The operator specifies whole aircraft parameters as listed in Table A-1. Any of these parameters can be changed through commands. It is important, however, that consistency checks be made to ensure mass balance, etc. A warning is displayed when, for example, total flow in exceeds total flow out. Table A-1 lists a standard set of parameters programed as default values. These are appropriate for an L-1011 with four compartments and tobacco smoke as the pollutant of interest.

TABLE A-1

Parameters for Whole Aircraft with L-1011
Four-Zone Parameterization

Parameter	Value
Volume	450.0 m^3
Recirculation	150.0 m^3/min
Leak rate	10.0 m^3/min
Net flow rate	140.0 m^3/min
Deposition	0.0033/min
Source rate	83.3300 mg/min
Exhaust flow	140.0 m^3/min
Makeup flow	150.0 m^3/min
Outdoor concentration	0.01000 mg/m3
Number of boxes	4

SIMULATING AIRLINER AIR QUALITY

The Cabinair model was used to simulate the steady-state concentrations of environmental tobacco smoke, carbon dioxide, and water vapor in multiple zones of three aircraft: B-727-200, B-767-200, and MD-80. Flow parameters were developed from the technical ventilation specifications of the aircraft. Figures A-4, A-5, and A-6 show the outside-air supply, recirculation, and controlled and uncontrolled leakage for these three aircraft.

The B-727-200 (Figure A-4) has a straightforward once-through ventilation system. The ECUs deliver 240 cfm, 350 cfm, and 2,235 cfm to the cockpit, first-class section, and coach section, respectively. The

2022933533

Source: https://www.industrydocuments.ucsf.edu/docs/jmvl0000

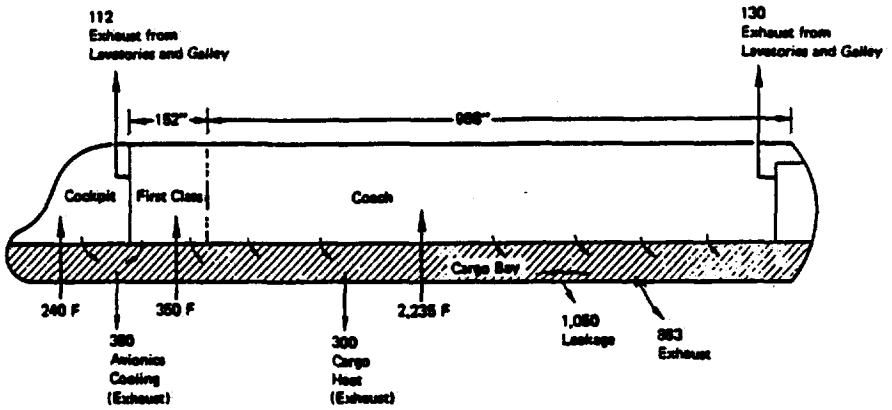

FIGURE A-4 B-727-200 cabin airflow distribution, cfm. All outside air. F, outside air. Uniform supply in cabin. Exhaust uniform at floor level. Leakage assumed uniform at 1,050 cfm. Arrows show direction of airflow. Based on information from Boeing (personal communication, 1985) and Lorengo and Porter.[3]

outside air delivered to the passenger sections (first class and coach) is assumed to be delivered uniformly over the entire length of the cabin. Air is discharged through both controlled and uncontrolled vents. The aft exhaust valve is used to control pressure and discharges 883 cfm. Avionics, cargo, lavatory, and galley vents (forward and aft) discharge a total of 892 cfm. There is leakage of 1,050 cfm.

The B-767-200 (Figure A-5) has a more complex ventilation system. The 2,388 cfm from the ECUs is mixed with 2,388 cfm of filtered recirculation air from the forward cabin and delivered to the cockpit and to the overhead air vents in the cabin. The overboard discharge manifold draws air from lavatories, galleys, and the aft avionics compartments, which then mixes with floor-level cabin exhaust and is discharged overboard.

The MD-80 ventilation system (Figure A-6) is different from either of the other two. The cockpit is supplied only with outside air. Recirculation air is drawn from along the floor of both first-class and coach sections of the passenger cabin and is mixed with outside air. This mixed air is then delivered to the first-class and coach sections.

2022933534

Source: https://www.industrydocuments.ucsf.edu/docs/jmvl0000

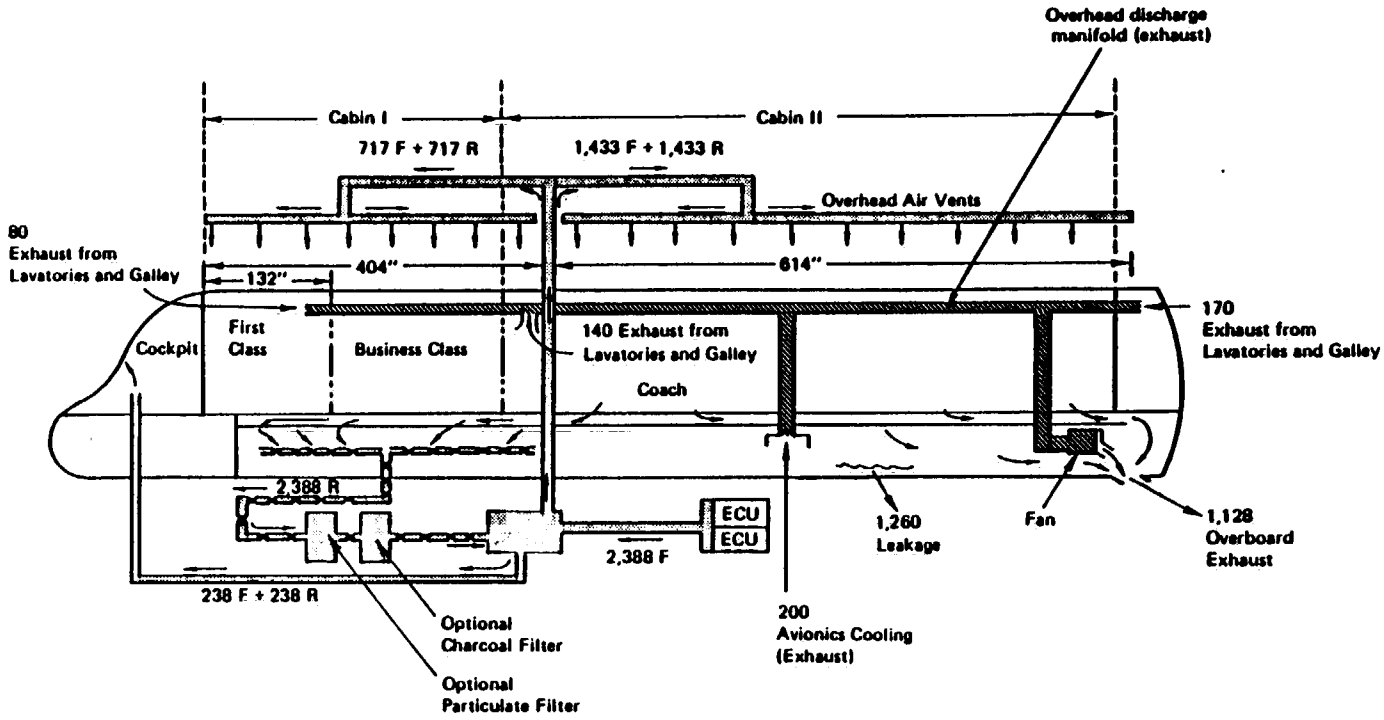

FIGURE A-5 B-767-200 cabin airflow distribution, cfm. ECU, environmental control unit. F, outside air. R, recirculated air. Arrows show direction of airflow. Leakage assumed uniform at 1,260 cfm. Based on information from Boeing (personal communication, 1985) and Lorengo and Porter.[3]

2022933535

Source: https://www.industrydocuments.ucsf.edu/docs/jmvl0000

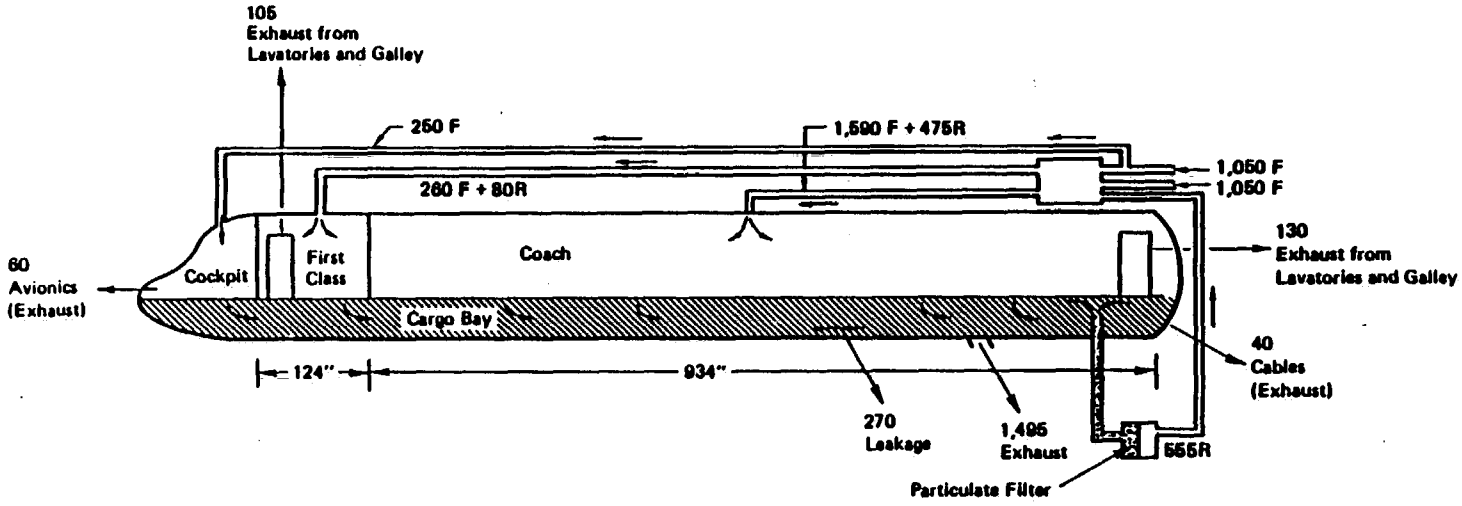

FIGURE A-6 MD-80 cabin airflow distribution, cfm. F, outside air. R, recirculated air. Leakage assumed uniform at 270 cfm. Arrows show direction of airflow. Based on information from McDonnell Douglas (personal communication, 1985) and Lorengo and Porter.[3]

2022933536

Source: https://www.industrydocuments.ucsf.edu/docs/jmvl0000

With these data and standard configuration diagrams available from Trans World Airlines (Figures A-7, A-8, and A-9), a volume-weighted partitioning of the flows was made. The volume of a given zone was assumed to be directly proportional to the linear dimension of the zone as a fraction of the total length of the aircraft. Generally, after the initial partitioning, flow imbalances remained. These imbalances were eliminated by allowing forward or backward flow to or from adjacent zones to compensate for an excess or deficiency of air movement. Flows were thus balanced to within approximately 1 m^3/min over the entire aircraft.

The source strengths used in the simulations were as follows. For respirable particles, cigarette smoke is the primary source. An active smoker produces

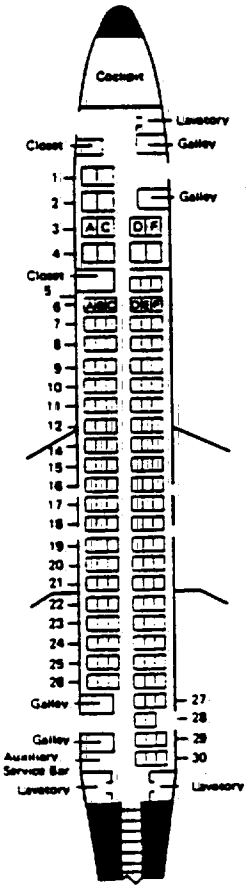

Zone	Rows	Seats	Crew
Flight Deck	—	—	3
First Class Lavatory and Galley	—	—	—
First Class Non-Smoking	1-3	8	1
First Class Smoking	4	4	—
Coach Non-Smoking	5-19	81	2
Coach Transition	20-21	12	—
Coach Smoking	22-30	41	1
Coach Lavatory and Galley	—	—	—

FIGURE A-7 Standard B-727-200 interior arrangement. Numbers of rows allotted for smoking can be increased or reduced according to demand for non-smoking seats. Figure reprinted with permission from Trans World Airlines.[4]

2022933537

Source: https://www.industrydocuments.ucsf.edu/docs/jmvl0000

respirable particles at approximately 3 mg/min. On the average, a smoker smokes 2 cigarettes/h and takes 10 min/cigarette, thus smoking one-third of the time. The scenarios investigated include an average state in which one-third of the smokers are smoking or every smoker is smoking at one-third the maximal rate. At a maximum, all smokers are smoking simultaneously. For carbon dioxide, a source strength of 0.5 L/min per person is used (a source strength of 0.5 L/min per person is used to approximate the proportions of active crewmembers and sedentary passengers).[2] ASHRAE uses 0.3 L/min.[1] The figure of 0.5 L/min is equivalent to 760 mg/min per person. A sedentary person, such as a passenger,

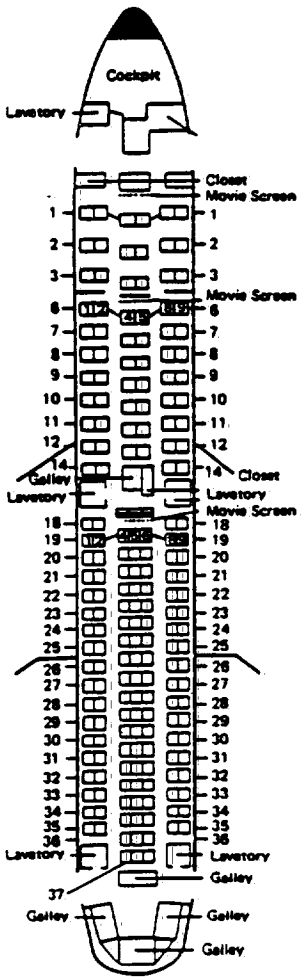

Zone	Rows	Seats	Crew
Flight Deck	—	—	2
First Class Lavatory and Galley	—	—	—
First Class Non-Smoking	1-2	12	1
First Class Smoking	3	6	1
Business Non-Smoking	6-10	30	1
Business Smoking	11-14	16	1
Business Lavatory and Galley	—	—	—
Coach Non-Smoking	18-27	67	1
Coach Transition	28-29	18	—
Coach Smoking	30-37	48	1
Coach Lavatory and Galley	—	—	—

FIGURE A-8 Standard B-767-200 interior arrangement. Numbers of rows allotted for smoking can be increased or reduced according to demand for nonsmoking seats. Figure reprinted with permission from Trans World Airlines.[4]

2022933538

Source: https://www.industrydocuments.ucsf.edu/docs/jmvl0000

produces water vapor at 700 mg/min, whereas an active person, such as a crew member, produces 2,000 mg/min.

Ambient concentrations of particles, carbon dioxide, and water are 0.010 $\mu g/m^3$, 330 ppm, and 1.5 g/kg of air, respectively. Changing these values (by filtration) will alter the results only slightly for respirable particles, but might have larger effects for carbon dioxide and water vapor.

Data in Tables A-1 through A-3 are for aircraft in the standard configuration, including normal recirculation and full occupancy with all packs running. Table A-4 presents data on the MD-80 aircraft, assuming, for comparative purposes, no recirculation. Table A-5 presents data on the B-767-200 aircraft with no recirculation, and Table A-6 presents data on the B-767-200 aircraft, assuming standard operating conditions, but only 60% occupancy.

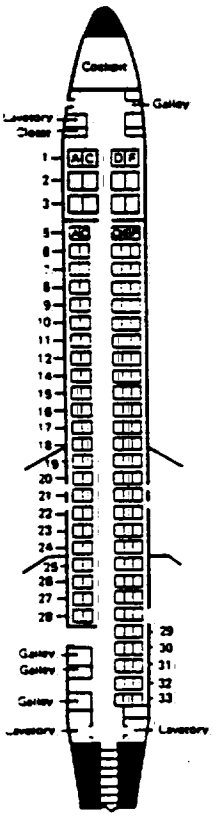

Zone	Rows	Seats	Crew
Flight Deck	—	—	2
First Class Lavatory and Galley	—	—	—
First Class Non-Smoking	1-2	8	1
First Class Smoking	3	4	—
Coach Non-Smoking	5-22	85	2
Coach Transition	23-24	10	—
Coach Smoking	25-33	35	1
Coach Lavatory and Galley	—	—	—

FIGURE A-9 Standard MD-80 interior arrangement. Numbers of rows allotted for smoking can be increased or reduced according to demand for non-smoking seats. Figure reprinted with permission from Trans World Airlines.[4]

2022933539

Source: https://www.industrydocuments.ucsf.edu/docs/jmvl0000

Generally, when air is recirculated, the concentrations of pollutants increase. As occupancy decreases, the concentrations of pollutants decrease. Although it is not exact, one can approximate both these phenomena as linear; i.e., 50% recirculation will result in doubling the pollutant concentrations, and 50% occupancy will halve the concentrations.

TABLE A-2

Calculated Concentrations of Various Pollutants on Simulated B-727-200 Aircraft

Zone[a]	Environmental Tobacco Smoke, mg/m^3 Average[b]	Environmental Tobacco Smoke, mg/m^3 Maximum[c]	CO_2, ppm	Relative Humidity (Water Vapor), %
Cockpit	0.010	0.010	517	7.8
First-class lavatory and galley	0.010	0.010	435	5.5
First-class nonsmoking	0.010	0.010	919	8.7
First-class smoking	1.302	3.886	1,178	10.8
Coach nonsmoking	0.058	0.154	1,284	10.9
Coach transition	0.018	0.034	1,373	11.6
Coach smoking	2.243	6.708	1,367	11.6
Coach lavatory and galley	0.299	0.876	484	4.4
Whole aircraft[d]	0.560	1.661	1,139	10.1
Volume averaged[e]	0.570	1.691	1,154	10.1
Supply air	0.010	0.010	330	3.7

[a] Zones are examples of standard configuration zones; 100% occupancy assumed; no recirculation. Supply air concentration is ambient concentration. CO_2 and water vapor concentrations assume temperature of 20°C.

[b] One-third of cigarette smokers smoking at any time (2 cigarettes/h).

[c] All cigarette smokers on plane smoking at same time.

[d] Average concentration derived from arithmetic average of zonal concentrations.

[e] Derived from zonal concentrations weighted by volume.

2022933540

Source: https://www.industrydocuments.ucsf.edu/docs/jmvl0000

TABLE A-3

Calculated Concentrations of Various Pollutants on Simulated B-767-200 Aircraft

Zone[a]	Environmental Tobacco Smoke, mg/m^3 Average[b]	Environmental Tobacco Smoke, mg/m^3 Maximum[c]	CO_2, ppm	Relative Humidity (Water Vapor), %
Cockpit	0.297	0.872	770	7.2
First-class lavatory and galley	0.295	0.865	770	6.7
First-class nonsmoking	0.293	0.860	1,240	10.3
First-class smoking	1.196	3.569	1,469	12.0
Business-class nonsmoking	0.471	1.395	1,535	11.5
Business-class smoking	1.998	5.976	1,590	11.8
Business-class lavatory and galley	0.314	0.923	1,140	8.2
Coach nonsmoking	0.293	0.861	1,483	11.4
Coach transition	0.293	0.861	1,773	13.7
Coach smoking	2.380	7.122	1,662	12.8
Coach lavatory and galley	0.660	1.961	1,610	6.6
Whole aircraft[d]	0.798	2.375	1,354	10.5
Volume averaged[e]	0.827	2.461	1,389	10.7
Supply air	0.300	0.881	707	6.2

[a] Zones are examples of standard configuration zones; 100% occupancy assumed; 50% of return air recirculated. CO_2 and water vapor concentrations assume temperature of 20°C.

[b] One-third of cigarette smokers smoking at any time (2 cigarettes/h).

[c] All cigarette smokers on plane smoking at same time.

[d] Average concentration derived from arithmetic average of zonal concentrations.

[e] Derived from zonal concentrations weighted by volume.

2022933541

Source: https://www.industrydocuments.ucsf.edu/docs/jmvl0000

TABLE A-4

Calculated Concentrations of Various Pollutants on Simulated MD-80 Aircraft

Zone[a]	Environmental Tobacco Smoke, mg/m^3 Average[b]	Environmental Tobacco Smoke, mg/m^3 Maximum[c]	CO_2, ppm	Relative Humidity (Water Vapor), %
Cockpit	0.126	1.214	638	7.6
First-class lavatory and galley	0.125	0.784	599	6.3
First-class nonsmoking	0.125	0.577	965	9.2
First-class smoking	0.688	2.209	867	10.1
Coach nonsmoking	0.206	0.634	1,522	12.6
Coach transition	0.638	1.912	1,585	12.7
Coach smoking	2.237	6.710	1,452	11.9
Coach lavatory and galley	0.124	0.370	540	4.5
Whole aircraft[d]	0.631	1.968	1,329	11.2
Volume averaged[e]	0.593	1.850	1,270	10.8
Supply air	0.127	0.380	519	5.1

[a] Zones are examples of standard configuration zones; 100% occupancy assumed; 21% of return air recirculated. CO_2 and water vapor concentrations assume temperature of 20°C.

[b] One-third of cigarette smokers smoking at any time (2 cigarettes/h).

[c] All cigarette smokers on plane smoking at same time.

[d] Average concentration derived from arithmetic average of zonal concentrations.

[e] Derived from zonal concentrations weighted by volume.

2022933542

Source: https://www.industrydocuments.ucsf.edu/docs/jmvl0000

TABLE A-5

Calculated Concentrations of Various Pollutants on Simulated B-767-200 Aircraft with No Recirculation

Zone[a]	Environmental Tobacco Smoke, mg/m^3 Average[b]	Environmental Tobacco Smoke, mg/m^3 Maximum[c]	CO_2, ppm	Relative Humidity (Water Vapor), %
Cockpit	0.010	0.010	393	4.9
First-class lavatory and galley	0.010	0.010	393	4.6
First-class nonsmoking	0.010	0.010	863	8.3
First-class smoking	0.914	2.721	1,091	10.1
Business-class nonsmoking	0.190	0.549	1,157	9.6
Business-class smoking	1.717	5.131	1,212	9.9
Business-class lavatory and galley	0.315	0.075	762	6.3
Coach nonsmoking	0.010	0.010	1,105	9.4
Coach transition	0.010	0.010	1,394	11.7
Coach smoking	2.097	6.271	1,283	10.8
Coach lavatory and galley	0.376	1.110	518	4.6
Whole aircraft[d]	0.515	1.525	976	8.5
Volume averaged[e]	0.544	1.611	1,011	8.7
Supply air	0.010	0.010	330	3.7

[a] Zones are examples of standard configuration zones; 100% occupancy assumed. CO_2 and water vapor concentrations assume temperature of 20°C.

[b] One-third of cigarette smokers smoking at any time (2 cigarettes/h).

[c] All cigarette smokers on plane smoking at same time.

[d] Average concentration derived from arithmetic average of zonal concentrations.

[e] Derived from zonal concentrations weighted by volume.

2022933543

Source: https://www.industrydocuments.ucsf.edu/docs/jmvl0000

TABLE A-6

Calculated Concentrations of Various Pollutants on Simulated B-767-200 Aircraft with 60% Occupancy and 50% Recirculation

Zone[a]	Environmental Tobacco Smoke, mg/m^3 Average[b]	Environmental Tobacco Smoke, mg/m^3 Maximum[c]	CO_2, ppm	Relative Humidity (Water Vapor), %
Cockpit	0.182	0.527	521	5.5
First-class lavatory and galley	0.181	0.523	483	5.1
First-class nonsmoking	0.180	0.520	681	7.2
First-class smoking	0.722	2.145	777	8.3
Business-class nonsmoking	0.287	0.841	747	7.9
Business-class smoking	1.203	3.589	760	8.1
Business-class lavatory and galley	0.192	0.558	563	6.0
Coach nonsmoking	0.180	0.520	747	7.9
Coach transition	0.180	0.520	877	9.3
Coach smoking	1.432	4.277	827	8.8
Coach lavatory and galley	0.400	1.180	473	5.0
Whole aircraft[d]	0.483	1.525	693	7.5
Volume averaged[e]	0.500	1.429	706	7.5
Supply air	0.184	0.533	474	5.0

[a] Zones are examples of standard configuration zones. CO_2 and water vapor concentrations assume temperature of 20°C.

[b] One-third of cigarette smokers smoking at any time (2 cigarettes/h).

[c] All cigarette smokers on plane smoking at same time.

[d] Average concentration derived from arithmetic average of zonal concentrations.

[e] Derived from zonal concentrations weighted by volume.

2022933544

Source: https://www.industrydocuments.ucsf.edu/docs/jmvl0000

REFERENCES

1. American Society of Heating, Refrigerating, and Air-Conditioning Engineers, Inc. ASHRAE Standard: Ventilation for Acceptable Air Quality. ASHRAE 62-1981. Atlanta, Ga.: American Society of Heating, Refrigerating, and Air-Conditioning Engineers, Inc., 1981.

2. Balvanz, J., S. C. Bowman, A. Fobelets, T. Lee, K. Papamichael, and R. Yoder. Examination of the Cabin Environment of Commercial Aircraft. Ames, Iowa: Iowa State University, 1982.

3. Lorengo, D. E., and A. Porter. Aircraft Ventilation Systems Study: Final Report. DTFA-03-84-CO-0084. Atlantic City, N.J.: U.S. Federal Aviation Administration Technical Center, 1985. (draft)

4. Trans World Airlines. TWA Aircraft Seating Guide. New York, N.Y.: Trans World Airlines, 1984.

2022933545

Source: https://www.industrydocuments.ucsf.edu/docs/jmvl0000

APPENDIX B

SELECTED MATERIAL FROM THE FAA ACCIDENT/INCIDENT DATA SYSTEM

This appendix presents data from the FAA Accident/Incident Data System (AIDS) on in-flight fires and explosions and ground fires (Table B-1), cabin smoke (Table B-2), and emergency descent and deployment of oxygen masks (Table B-3). The incidents summarized here constitute all those reported from the beginning of 1980 through November 1985. The only deaths reported were those associated with the Air Canada fire near Cincinnati in 1983, in which 23 people died.

The data appear essentially as they appear in the AIDS computer printout. Some explanation of codes and abbreviations used in the tables is in order. The date of an incident is presented as a six-digit number, in which the first two digits represent the year, the next two the month, and the final two the day of the month; for example, 800118 means January 18, 1980. The aircraft manufacturers' names need little explanation, but "Doug" stands for McDonnell Douglas, "CVAC" for Convair Aircraft Company, "Airbus" for the European manufacturer Airbus Industrie, "BAC" for British Aerospace Corp., "EMB" for the Brazilian Embraer, "StBros" for the Irish firm Short Bros., and "Swrngn" for Sweringen. "TOB" stands for total on board. In the "Damage" column, "N" means none, "S" means slight, "M" means moderate, and "D" means severe. Under "Flt/Type" (flight type), "APAX" means all passenger, "ACAR" means all cargo, "PXCG" means combined passenger and cargo, and "OTHER" covers all remaining slight categories, such as test and experimental flights.

2022933546

Source: https://www.industrydocuments.ucsf.edu/docs/jmvl0000

TABLE B-1

In-flight Fires and Explosions and Ground Fires

Date	Make	Model	TOB	Damage	Flt/Type	Remarks
800118	Nihon	YS11A500	8	N	APAX	Right engine fire warning came on in flight. Discharged fire bottle and shut down engine.
800119	Boeing	B-747	3	S	ACAR	Pilot shut down #3 engine because of fire warning light. Restarted later in flight. Fire damage found.
800228	Doug	DC-8	108	M	APAX	Engine shutdown due to power loss and vibration. Tach generator housing had been ingested into the engine.
800319	Boeing	B-737-222	75	N	APAX	Loose landing light switch. Terminal caused minor electrical fire.
800406	Boeing	B-747-228B	111	N	APAX	Flight returned due to fire warning light and engine shut down. Engine was damaged.
800514	Doug	JT3D	94	M	APAX	Engine failure resulted in numerous punctures in skin. Fire started due to ruptured fuel tank.
800614	Boeing	B-747-121	111	M	APAX	Engine shut down. Flight returned due to fire warning. Found chafed hydraulic line at engine started fire.

2022933547

Source: https://www.industrydocuments.ucsf.edu/docs/jmvl0000

TABLE B-1 (continued)

Date	Make	Model	TOB	Damage	Flt/Type	Remarks
800626	Doug	DC-9-31	3	M	APAX	Right engine compressor failed causing fire.
801008	Doug	DC-9-31	60	M	APAX	Passenger's lighter burst into flames. Flight attendant extinguished the fire with apple juice.
801205	Boeing	B-727-227	57	M	APAX	Several breakers opened and crew smelled smoke after takeoff. Returned.
801211	Lkheed	L-1011	108	M	APAX	Experienced engine fire during taxi. Suspect faulty generator.
810128	Doug	DC-10	83	M	APAX	Fire occurred in passenger carry on hand bag. Probably due to careless smoking.
810511	Boeing	B-727-231	7	M	APAX	Smoke and flames behind forward instrument panel. Found master warning card and wiring burned.
810617	Boeing	B-727-23	1	N	APAX	Baggage fire in flight. Found package with 24 volt battery pack which may have shorted. No aircraft damage.
810706	CVAC	CVAC-340	19	N	APAX	Fire warning/bell came on when #2 engine shutdown. Oil accumulations from small leaks ignited around augmentor.

2022933548

Source: https://www.industrydocuments.ucsf.edu/docs/jmvl0000

810725	CVAC	STC240	2	M	ACAR	Found a fire in the left engine. Damage confined to engine compartment.
810814	Lkheed	L-1011	1	M	APAX	Electrical fire in service cart receptable. Put out via CO_2 and unplugged. Continued to destination.
810817	Boeing	B-747	427	N	APAX	Inflight fire in lavatory trash bin. Extinguished by cabin crew. No damage.
810828	Boeing	B-747-135	287	N	APAX	Cabin wall fire from exploding window light ballast.
810914	Boeing	B-747-151	208	M	APAX	Compressor stall and engine fire NR4 engine. Used extinguishers. Landed ok. NR2 bearing and NR4 gear box failure.
810914	Boeing	B-747	92	M	APAX	#3 engine fire after takeoff. Returned. Thrust reverser bleed valve broken. Burned wiring in stub wing.
811212	Boeing	B-727-223	32	N	APAX	Holding near gate, started APU, fire seen by cabin attendant, APU replaced. No fault found.
811212	Boeing	B-747	3	M	PXCG	On approach a small fire erupted in upper galley waste container. Put out by ice water. Fire bottle empty.

2022933549

Source: https://www.industrydocuments.ucsf.edu/docs/jmvl0000

TABLE B-1 (continued)

Date	Make	Model	TOB	Damage	Flt/Type	Remarks
820202	CVAC	STC204T	2	M	ACAR	Fire right engine on approach. Secured engine and pulled fire bottle. Fire put out on ground. Ruptured fuel line.
820705	Boeing	B-747-121	409	M	APAX	Pilot experienced fire warning on engine. Returned to airport. Fire damage to wiring insulation and cowling.
820707	Boeing	B-747-251B	343	N	APAX	On rotation at takeoff, aircraft had a fire warning on engine. Engine shut down. Fuel dumped. Fuel nozzle coking.
820710	Doug	DC-9	2	M	APAX	Pilot returned when engine fire warning came on. Fired both bottles. Damage to turbine section.
820821	Doug	DC-10-30F	393	M	APAX	During rotation, engine failed and fire warning came on. Passengers deplaned on taxiway. Landed overweight.
820830	Lkheed	L-1011	156	M	PXCG	Minor fire in lavatory. Extinguished fire immediately. Cause of fire unknown. FBI notified.
820907	Doug	DC-9-32	104	M	APAX	Crew extinguished fire in rest room. Damage limited to Kleenex box fixture. FAA security met aircraft on arrival.

2022933550

Source: https://www.industrydocuments.ucsf.edu/docs/jmvl0000

820914	Boeing	B-747-212B	491	S	PXCG	Pilot experienced a sudden engine thrust loss. Had fire warning indications. Engine shutdown. Fire bottle used.
821106	Boeing	B-747-136	2	N	APAX	Oven A-3 caught on fire at cruise altitude. Overrun circuit breaker was opened and fire stopped.
821222	Boeing	B-747	242	M	PXCG	#4 engine caught on fire. Fire extinguished. Found #3 bearing breather manifold broken.
830301	Airbus	A-300-B2K3C	90	N	APAX	#1 engine temperature climbed to 957 degrees. Flight attendant reported fire. Fire bottle discharged. Returned.
830401	Boeing	B-727-223	3	N	APAX	Fire occurred in a bag under seat. Attendant put out fire. Fire resulted from a cigarette ash. Bad fire extinguisher.
830521	Boeing	B-747-123	3	N	PXCG	Fire warning light came on. Engine shut down. Leaking fuel ignited. Small fuel leak at the pylon connector.
830527	Lkheed	L-1011-3851	78	M	APAX	Heard a loud pop. Smoke and flames seen behind panel. Firebottle extinguished fire. Windshield heat breakers popped.
830602	Doug	DC-9-32	46	D	APAX	Fire started from unknown source in aft lavatory. Emergency landing was made and aircraft burned.

2022933551

Source: https://www.industrydocuments.ucsf.edu/docs/jmvl0000

TABLE B-1 (continued)

Date	Make	Model	TOB	Damage	Flt/Type	Remarks
830611	Boeing	B-727-222	149	M	PXCG	(No entry)
830705	Doug	DCB	137	S	PXCG	Experienced failure and fire of #1 engine on climbout. Engine shut down. Turbine failure and evidence of fire.
830712	CVAC	CVAC-440	8	M	PXCG	Engine fire on climbout. Engine shut down. Fire bottle used. Accessory section showed evidence of fire.
830721	Doug	DC-10-10	266	N	PXCG	Had a paper fire in waste chute in aft lavatory. Dumped water into chute. Found paper match and scorched Kleenex.
830808	Lkheed	L-1011	3	N	PXCG	Had a fire in lavatory. Attendant used fire extinguisher. Cigarette butt found among the paper seat covers.
830819	Boeing	B-747-123	401	N	PXCG	Saw smoke in lavatory. Believed a cigarette caused the fire. Water used to put fire out.
830822	Lkheed	L-1011	3	N	APAX	Used fire extinguisher to extinguish a burned food spill in galley oven.

2022933552

Source: https://www.industrydocuments.ucsf.edu/docs/jmvl0000

830907	Boeing	B-727-23	41	N	PXCG	Reported electrical fire at cruise altitude. Situation under control. Found food left in one of the ovens.
830923	Boeing	B-727-200	92	N	PXCG	#1 engine fire on takeoff climb. Used fire bottles. Returned to DFW. Found a bleed air leak.
831017	BAC	BAC-146-200A	37	S	APAX	#3 engine caught on fire shortly after takeoff. Fire bottles used. Engine shutdown. Returned.
831207	Doug	DC-10	159	M	APAX	Blew a tire on landing rollout. Fire in right wheel well. Found right forward main gear truck had failed.
831214	Boeing	B-727-23	3	M	PXCG	Smoke and fire in a seat. Fire extinguished. Found empty cigarette package and napkin stuffed between seat cushion.
840201	Doug	DC-9-31	66	N	PXCG	Fire in the commode bowl. Taxiing for takeoff. Flames were from white tissue. Found smoke deposit under toilet seat.
840210	Boeing	B-747-136	126	M	APAX	#2 engine shut down due to inflight fire. Found #2 engine fuel shutoff valve in #2 fuel tank had failed.
840414	Boeing	B-747	3	M	ACAR	Engine fire warning light came on. Fire bottles used. Engine shut down. Fuel leak in right raceway.

2022933553

Source: https://www.industrydocuments.ucsf.edu/docs/jmvl0000

TABLE B-1 (continued)

Date	Make	Model	TOB	Damage	Flt/Type	Remarks
840419	Boeing	B-727-200	85	M	APAX	Explosion in engine and loss of hydraulic system on takeoff. Explosion came from engine combustion section.
840517	Boeing	B-727-2M7	142	N	APAX	Fire warning light came on. Fire bottles discharged. Aircraft evacuation via slides on taxiway.
840524	Boeing	B-727-100	7	N	APAX	Engine fire on climb to cruise. Found a stuck open starter valve. Allowed hot bleed air into the starter system.
840602	Boeing	B-747-121	182	N	PXCG	Low oil pressure on #3 engine. Fire warning. Fire bottles used. Evidence of fire in gear box. Cause undetermined.
840612	Boeing	B-727-200	3	S	PXCG	Flame and smoke coming from #3 engine. Continued to destination. Found starter failure. Cause undetermined.
840716	Doug	DC-10-10	227	M	PXCG	Inflight fire in forward lower galley. #4 oven. Firemen came on board at end of runway. Cause undetermined.
840806	Doug	DC-9	85	S	APAX	Decrease of EPR, loud bang, engine failed. Top cowling absent. Fuel nozzle lockring misassembled.

2022933554

Source: https://www.industrydocuments.ucsf.edu/docs/jmvl0000

841115	Boeing	B-727	140	N	APAX	Flight attendant discovered small fire in aft lavatory. Extinguished.
850306	Boeing	B-727-223	124	M	APAX	Attempted restart on APU. Flames shot up outside aircraft. Some passenger panic. Improper restart procedure APU.
850503	Boeing	B-727-22	106	M	PXCG	Smoke coming from rear toilet. Extinguisher used and smoke dissipated. Found burned flush motor.
850511	Boeing	B-747-122	199	N	PXCG	Inflight fire warning #1 engine. Shut down and returned to airport. Evidence of small fire near #4 heat shield.
850620	Boeing	B-747-132	373	M	PXCG	Loss of oil and fire warning #2 engine. Shut down and diverted. Oil filter bearing failure. Fuel filter break, fire.

2022933555

Source: https://www.industrydocuments.ucsf.edu/docs/jmvl0000

TABLE B-2

Cabin Smoke

Date	Make	Model	TOB	Damage	Flt/Type	Remarks
800220	Boeing	B-737	94	N	APAX	Flight taxied out. Had fuel smell in cockpit. Taxied back to gate. Departed 13 minutes later.
800222	Doug	DC-9-15	84	N	APAX	Flight returned due to odor and smoke. Cabin crew began evacuation procedures in error.
800228	Boeing	B-727-200	28	N	APAX	Malfunction in APU during start. Filled cabin with smoke. Cause unknown.
800311	Doug	DC-9	3	N	APAX	After takeoff, crew detected fuel fumes in cabin cockpit. Flight returned. Fuel spillage during refueling.
800413	Boeing	B-727	105	N	APAX	Smoke noted in cockpit. Flight returned to Austin. Interior lighting ballast transformer failed.
800417	Boeing	B-737-247	88	N	APAX	Pilot smelled smoke. Fuel indicator shorted and failed.
800514	Frchld	FH-227	36	N	APAX	Cabin blower failed, causing smoke in cockpit. Safe unscheduled landing made.

2022933556

Source: https://www.industrydocuments.ucsf.edu/docs/jmvl0000

800615	Doug	DC-9-31	74	N	APAX	Flight diverted due to smoke in galley. Galley work light ballast had shorted.
800721	CVAC	STCAPJC	29	N	APAX	Flight aborted due to smoke in cockpit. Found faulty cabin compressor.
800918	Boeing	B-727	64	N	APAX	Taxied back to gate due to smoke in cockpit. Replaced radar unit.
801023	Doug	DC-9-51	81	N	APAX	Captain and first officer experienced nausea and disorientation from oven fumes. Made unscheduled stop.
801117	Boeing	B-727	108	N	APAX	Smoke in the cockpit of unknown origin, made an unscheduled landing. Turned out to be spoiler actuator motor.
801205	Boeing	B-727-227	57	M	APAX	Several breakers opened and crew smelled smoke after takeoff. Returned.
801223	Doug	DC-10-30F	111	N	APAX	Flight attendant notified crew of smoke in area of seat of row 15. Electrical system malfunction.
810113	Boeing	B-727	33	N	APAX	Sharp bump, gunpowder odor in cabin, precautionary landing. No bombs. Cause unknown.
810128	Doug	DC-10	83	M	APAX	Fire occurred in passenger carry on hand bag probably due to careless smoking.

2022933557

Source: https://www.industrydocuments.ucsf.edu/docs/jmvl0000

TABLE B-2 (continued)

Date	Make	Model	TOB	Damage	Flt/Type	Remarks
820109	Boeing	B-737-2H4	55	N	APAX	Enroute, half annunciator and master caution lights came on, replaced generator and APU module NR 693731423.
820119	Lkheed	L-1011	126	N	APAX	On takeoff, flight crew smelled smoke, donned masks. Smoke dissipated. Suspect deicing fluid in air conditioning.
820129	Doug	DC-10-10	180	N	APAX	Spray deicing fluid during deicing into APU inlet. Smoke fumes entered cabin. Passenger evacuated.
820208	Boeing	B-727-222	2	N	PXCG	Loud thump on takeoff. Landed normal at destination. No discrepancies.
820209	Doug	DC-9-31	42	N	APAX	Smoke in cabin from failed oil seal bearing, PN 20495054, on air cycle motor in tail.
820210	Doug	DC-9-32	2	N	PXCG	No right main gear down light. Landed OK. Pinned gear. Found defective "gear down lock" micro switch.
820309	Boeing	B-747	210	N	APAX	Smoke and electrical odor noticed in cockpit. Emergency equipment alerted. Dimming switch card had shorted.

2022933558

Source: https://www.industrydocuments.ucsf.edu/docs/jmvl0000

820419	Doug	DC-9-80	15	S	APAX	Burning odor aft cabin. Returned to gate, off loaded. Found scorched paper towel on hot plate.
820430	Boeing	B-727-200	113	M	PXCG	Smoke in cabin on final approach. Evacuated passengers on landing. Radio problem with rescue unit. Air inlet door actuator.
820503	Boeing	B-727-223	47	M	PXCG	Unsafe gear indication. Pinned gear. Smoke in cabin from overheated pack. Inoperative gear accessory unit.
820517	Boeing	B-727-231	74	M	APAX	Smoke and fumes from galley in cabin. Shut down galley. After landing found a small piece of wood in oven.
820701	CVAC	STC-240T	35	M	APAX	Smoke appeared in cockpit after takeoff. Returned. Found EDC internal oil seal leaking into ventilating air.
820720	Boeing	B-727	5	M	APAX	Smoke in cockpit. Battery charged circuit popped. Battery charger overheated. PN 607013.
820810	Boeing	B-727-223	117	M	APAX	In climbout, rudder press-to-test light, PN054-1011-016, stuck, overheated, caught fire.
820908	Boeing	B-737-100	73	M	PXCG	Pilot detected strong smell of electrical overheat odor. Faulty transformer rectifier found. Unit replaced.

2022933559

Source: https://www.industrydocuments.ucsf.edu/docs/jmvl0000

TABLE B-2 (continued)

Date	Make	Model	TOB	Damage	Flt/Type	Remarks
820923	Boeing	B-727-223	117	N	APAX	Stewardess smelled electrical smoke in galley area. Found food spilled in oven. Cleaned oven. Checked ok.
820924	Doug	DC-10-10	239	N	APAX	Failure of non-reversible rudder hydraulic pump caused fumes to enter cabin at start up. Passengers deplaned.
820930	CVAC	STCAPJC	3	N	PXCG	Coffee maker shorted out creating smoke in cabin. Crew shut off the circuit breaker after landing.
821017	Doug	DC-9-81	127	M	APAX	Taxiing to gate ATC advised smoke coming from engine. Aircraft evacuated. Broken hydraulic line from reverse system.
821111	Doug	DC-8	196	N	PXCG	Crew detected smoke in cabin. Returned. Found a wing flood light transmitter in panel had overheated.
821226	Boeing	B-727-100	88	N	APAX	Aircraft filled with smoke. Crew on oxygen. Depressurized, smoke eliminated. Deicing fluid in water separator bag.
830110	Boeing	B-727	64	N	APAX	Fire warning #2 engine. Smoke in cabin. Passengers deplaned on taxiway. No evidence of fire. Broken stage duct.

2022933560

Source: https://www.industrydocuments.ucsf.edu/docs/jmvl0000

830207	Boeing	B-757-200	108	N	APAX	During deicing of aircraft glycol fumes were emitted into cabin and cockpit. Fumes came through apu air inlet door.
830202	Boeing	B-727-22	110	N	PXCG	Cabin pressure uncontrollable. Smoke in cabin. Pressure regained at FL 180. Replaced pressure flow control valves.
830523	Boeing	B-737-222	59	N	APAX	Smoke in cabin while taxiing. Smoke came from an overheated air conditioning pack. Malfunctioning battery bus relay.
830527	Lkheed	L-1011-3851	78	M	APAX	Heard a loud pop. Smoke and flames seen behind panel. Firebottle extinguish fire. Windshield heat breakers popped.
830603	Boeing	B-727-200	131	N	APAX	Smoke in cabin. Aircraft evacuated at gate. Broken hydroline caused skydrol to vaporize. Discharge blew in cabin.
830617	Boeing	B-727-123	85	N	PXCG	Failure of the galley ovens overheat thermostat caused crew to suspect a fire. Smoke caused by food spillage.
030702	Frchld	FH-227C	38	M	APAX	Left DC generator failed at cruise altitude. Generator control panel and voltage regulator were malfunctioning.

2022933561

Source: https://www.industrydocuments.ucsf.edu/docs/jmvl0000

TABLE B-2 (continued)

Date	Make	Model	TOB	Damage	Flt/Type	Remarks
830716	Frchld	FH-227	28	N	APAX	Smelled smoke in cockpit. High amp draw on generator. Bearing failure in air condition air recirculating fan.
830721	Doug	DC-10-10	266	N	PXCG	Had a paper fire in waste chute in aft lavatory. Dumped water into chute. Found paper match and scorched Kleenex.
830819	Boeing	B-747-123	401	N	PXCG	Saw smoke in lavatory. Believed a cigarette caused the fire. Water used to put fire out.
830820	Boeing	B-737	2	N	APAX	Heard relays chattering. Saw light flashes behind breaker panel. Found transistors shorted out in card M562.
830923	Boeing	B-727	103	N	APAX	Cabin filled with smoke while holding for gate. Generator control bus circuit breaker was popped. Fans not working.
831007	Boeing	B-727-200	83	M	APAX	Smoke and electrical smell noticed on climbout. Replaced right hand taxiway turnoff light switch and burned wire.

2022933562

Source: https://www.industrydocuments.ucsf.edu/docs/jmvl0000

831102	CVAC	CVAC-440	18	N	APAX	Cabin and cockpit became filled with smoke. Returned. Found cabin compressor bearing and seal damaged.
831117	Doug	DC-8-61	247	N	APAX	Smoke in cabin. Aborted takeoff roll. Two faulty fluorescent light ballasts caused the smoke. Tires smoking.
831124	Boeing	B-737-222	36	N	APAX	Smoke in cabin during start up. Landing gear squat switch open. Stopped ground cooling fans. Overheated right pack.
831201	Boeing	B-727-23	68	M	APAX	Smoke in cabin. Found overheated oven. Made precautionary landing en route. No damage found.
831214	Boeing	B-727-23	3	M	PXCG	Smoke and fire in a seat. Fire extinguished. Found empty cigarette package and napkin stuffed between seat cushion.
831226	Doug	DC-9	2	N	APAX	Suffered smoke in cabin at cruise altitude. Landed at Kansas City. Smoke cleared on final approach. Cause undetermined.
840105	Boeing	B-737-2B7	43	N	APAX	Smoke filled cabin. Slide evacuation. Crew not notified of deicing. Deicing fluid ingested into the air packs.

2022933563

Source: https://www.industrydocuments.ucsf.edu/docs/jmvl0000

TABLE B-2 (continued)

Date	Make	Model	TOB	Damage	Flt/Type	Remarks
840129	Boeing	B-727-23	122	N	APAX	Electrical power failed while taxiing. Haze in cabin. Engineer used placarded apu. Overheated air conditioner pack.
840212	EMB	EMB-110P1	11	N	APAX	Smoke in cabin after takeoff. Returned. Ground blower fan motor had shorted and burned up.
840215	Boeing	B-727-2M7	151	M	PXCG	APU field relay tripped. Lost all power. Pack overheated. Filled cockpit and cabin with smoke. Aircraft evacuated.
840419	Boeing	B-727	62	M	APAX	Smoke in cabin during enplanement of passengers. Found smoke was coming from a ballast for a fluorescent light.
840517	Doug	DC-10-40	248	M	PXCG	Smoke in cockpit. Returned. Found a wire bundle under copilot's glare shield burned through.
840627	Boeing	B-737-130	123	M	APAX	Cockpit had electrical smoke due to failure of capacitor in generator control unit. Antiskid inoperative, tires blew.
840731	Fokker	F-27	22	N	APAX	Smoke in cockpit from instrument panel. Turned off DME and cleared smoke. Weather radar had electronic short.

2022933564

Source: https://www.industrydocuments.ucsf.edu/docs/jmvl0000

840806	Boeing	B-727-231	3	N	APAX	Smoke in cockpit. Crew went on oxygen. Found the weather radar unit had failed when its transformer had overheated.
840811	Boeing	B-727-100	56	N	PXCG	Smoke in cockpit. Masks not used. Found hi intensity light switch shorted.
840830	Fokker	F-27	26	N	PXCG	Smoke coming from aft galley water heater. Found a loose charred wire to water heater.
841112	Nihon	YS-11	4	N	PXCG	Smoke in cabin. Requested lower altitude. Released pressurization to air cabin. Emergency hydraulic pump had failed.
841201	Boeing	B-727-222	103	N	APAX	Smoke from cabin light panel. CB pulled. Light ballast defective.
841204	Boeing	B-727-2M7	89	M	APAX	Smoke and arcing from P611 panel. Aborted takeoff. Heat and smoke damage near left ground blower circuit breaker.

2022933565

Source: https://www.industrydocuments.ucsf.edu/docs/jmvl0000

TABLE B-2 (continued)

Date	Make	Model	TOB	Damage	Flt/Type	Remarks
850121	Boeing	B-727-243	2	N	APAX	Returned for landing due to smoke and fumes in cockpit. Skydrol in bleed air system, check valve failed.
850213	Doug	DC-10-40	140	N	PXCG	Pungent electrical odor, whiff of smoke seat 12. Multiplex encoder overheated.
850220	StBros	SD-360	3	N	OTHR	Smoke in cockpit after turning on ground power. External power relay damaged by electrical fault.
850225	Doug	DC-9-15	2	N	APAX	After takeoff aircraft filled with smoke. Uneventful unscheduled landing. Left and right coalescer bags replaced.
850309	Boeing	B-727-247	32	N	APAX	Smoke in passenger cabin. Overheated transformer at upper strobe light. Oil leaked out of transformer.
850408	Doug	DC-9-82	2	N	APAX	Circuit breakers for transformer rectifiers opened. Other breakers opened. Replaced rectifiers, AC control panel.
850503	Boeing	B-727-22	106	M	PXCG	Smoke coming from rear toilet. Extinguisher used and smoke dissipated. Found burned flush motor.

2022933566

Source: https://www.industrydocuments.ucsf.edu/docs/jmvl0000

850522	Boeing	B-747-127	504	N	PXCG	Trash fire in container between lavatories. Used extinguishers and eliminated smoke.
850608	Boeing	B-727-247	68	N	APAX	Irritating fumes in cabin area. Passengers exited rear door. Flap control valve in left wheel well leaking into APU.
850626	Boeing	B-727-222	68	N	APAX	Cockpit and cabin filled with acrid smoke. Returned for landing, oil seal failed in air cycle machine.
850822	Doug	DC-9-82	131	N	APAX	Smoke and fumes in cockpit and cabin. Diverted where maintenance replaced oven in galley. Timer was defective.

2022933567

Source: https://www.industrydocuments.ucsf.edu/docs/jmvl0000

TABLE B-3

Emergency Descent and Deployment of Oxygen Masks

Date	Make	Model	TOB	Damage	Flt/Type	Remarks
790211	Doug	DC-10-10	229	M	APAX	Faulty number 1 TR unit and bus control panel caused overhead warning lights to come on. D1 breaker popped.
790622	Doug	DC-9-31	29	N	APAX	Flight descended and returned after pressurization loss. Found broken line.
791021	Doug	DC-9-31	92	N	APAX	Crew descended from FL 310 and completed flight at 240. Found right air conditioning pack turbine failure.
791209	Doug	DC-9-31	60	N	APAX	Could not control cabin pressure at altitude. Maintenance could not duplicate the problem.
800305	Boeing	B-747	111	N	APAX	Flight had to shut down #3 engine due to compressor stalls. Metal residue found in bleed air ports.
800307	Doug	DC-9	91	N	APAX	Cabin pressure started to climb. Maintenance unable to duplicate problem.
800323	Frchld	FH-227	38	N	APAX	Pilot unable to get "gear safe" light. Only gear in transit. Made normal landing, problem was in switch.

2022933568

Source: https://www.industrydocuments.ucsf.edu/docs/jmvl0000

800328	Boeing	B-727	78	N	APAX	Engine shut down due to turbine failure. Flight returned and cancelled.
800329	Boeing	B-707	108	N	APAX	Lost hydraulic fluid in flight. Worn O ring on reservoir drain plug.
800406	Boeing	B-740-U	111	M	APAX	Aircraft sustained bird strike causing damage to radome and forward bulkhead.
800406	Boeing	B-747	0	N	APAX	Aft cargo fire warning came on flight. Maintenance replace faulty fire protection system.
800515	Boeing	B-727-22	40	N	APAX	Cabin pressurization could not be controlled, oxygen masks deployed. Safe landing made after emergency descent.
800515	Doug	DC-9-14	2	N	APAX	Flight diverted after cabin pressurization climbed. Replaced radio rack venturi shut off valve.
800531	Boeing	B-747	111	N	APAX	Engines developed power problems at altitude but application of fuel engine heat cleared the problems.
800629	Boeing	B-727	105	N	APAX	Pressurization problems at FL 370. Replaced door seal outflow valves and pressurization controllers.
800703	Doug	DC-9	63	N	APAX	Flight had uncontrollable rise in cabin pressure; craft descended to 14,000 and masks deployed.

2022933569

Source: https://www.industrydocuments.ucsf.edu/docs/jmvl0000

TABLE B-3 (continued)

Date	Make	Model	TOB	Damage	Flt/Type	Remarks
800711	Boeing	B-727	97	N	APAX	Emergency descent when control of cabin pressure lost at FL 260. Door seals outflow valve leaking.
800711	Boeing	B-727	97	N	APAX	Emergency descent when control of cabin pressure lost at FL 260. Door seals outflow valve leaking.
800715	Boeing	B-727-247	106	N	APAX	Experienced rapid decompression due to faulty pressure controller.
800731	Boeing	B-727-200	87	N	APAX	Lost cabin pressure on climbout. Returned to airport.
800818	Boeing	B-727-200	88	N	APAX	Hydraulic "A" system failure due to failed bolts on flap selector valve.
801104	Doug	DC-9	18	N	APAX	Aircraft experienced depressurization at FL 330. Masks dropped. Emergency descent. Landed uneventfully.
801126	Boeing	B-727-30	79	N	APAX	Pressurization lost at 17,800 feet. Rear cargo door not properly latched.
801222	Boeing	B-747-121	16	N	APAX	Emergency descent after crew unable to control pressurization. Replaced auto controller.

2022933570

Source: https://www.industrydocuments.ucsf.edu/docs/jmvl0000

801227	Doug	DC-9-31	115	N	APAX	Flight experienced electrical failure and depressurization. A wire had broken in the transformer.
810106	Boeing	B-727	76	N	APAX	Cabin altitude started to climb. Descended to safe altitude. Found cracked starter duct.
810110	Doug	DC-9-32	64	N	APAX	Cabin lost pressurization. Caused descent emergency. Replaced right generator, control panel and auto relay system.
810310	Boeing	B-727-227	68	N	APAX	Cabin started to climb at Flight Level 270. Crew could not control. Cabin pressure controller replaced.
810430	Doug	DC-9	52	N	APAX	Aircraft made an emergency descent due to loss of air flow and pressure rising.
810515	Doug	DC-9	72	N	APAX	Cabin began to climb while cruising at 35,000 ft. Declared emergency and descended to 10,000 ft. Duct found blown off.
810617	Lkheed	L-1011-3851	2	N	APAX	Lost pressurization at FL 350. Cargo door seal failed.
810717	Boeing	B-727-223	69	N	APAX	Losing pressurization emergency descent and landing. System to be checked.

2022933571

Source: https://www.industrydocuments.ucsf.edu/docs/jmvl0000

TABLE B-3 (continued)

Date	Make	Model	TOB	Damage	Flt/Type	Remarks
810719	Lkheed	L-1011	236	N	APAX	Windshield cracked en route. Descended to unpressurized altitude. Landed destination. Replaced windshield.
810817	Doug	DC-8-63	4	N	ACAR	#2 engine fire warning indication. Made emergency landing. Found broken wire in system. Repaired wire.
810904	Boeing	B-707-323B	86	N	APAX	Minor problem crack in outflow valve. Flight engineer then mismanaged cabin controls. Caused cabin decompression.
811108	Doug	DC-9-31	95	N	APAX	Pressurization problem, emergency descent, some oxygen masks failed to deploy, ferried to maintenance.
811124	Boeing	B-727-227	66	N	PXCG	Cabin pressure climbed, emergency descent, deployed masks. Engine bleed valve and diode in aural horn replaced.
811201	Doug	DC-9	0	N	APAX	Cabin altitude problems, descent emergency, oxygen mask deployed. Cabin outflow valve jammed open by dirt.
811217	Doug	DC-8-61	230	M	APAX	Rapid cabin pressure loss, emergency descent, returned. Service air condition panel separated. Check valve jammed.

2022933572

Source: https://www.industrydocuments.ucsf.edu/docs/jmvl0000

82000827	CVAC	STCAPJC	21	N	APAX	Aircraft lost cabin pressure at cruise altitude. Found broken wire at left hand squat switch.
820111	Doug	DC-8-63	229	N	APAX	Uncontrolled cabin pressure. Passengers, attendants not advised. Burst water tank frozen outflow valve.
820327	Boeing	B-727-231	143	N	APAX	Cabin altitude started climbing. Pressure stabilized by closing engine bleed valve.
820517	Doug	DC-9	83	N	PXCG	Cabin lost pressure, buffeting on emergency descent with speed brake and gear out. Cause of problems unknown.
820627	Doug	DC-8-61	162	N	PXCG	Heard rumble and simultaneously cabin depressurized. Outlet duct parted at a connection. Had a compressor vibration.
820728	Boeing	B-727-223	151	N	PXCG	Takeoff warning horn activated due to misaligned APU. Cargo outflow valve stuck. Depressurization unnoticed by crew.
820913	Boeing	B-727	37	N	APAX	#3 bleed air tripped at 37,000 feet. Used emergency procedures. Cabin pressure climbed, masks dropped.
821221	Doug	DC-10-10	122	N	PXCG	Unable to maintain cabin pressure. Emergency descent to 1000 feet. Found a defective cabin pressure controller.

2022933573

Source: https://www.industrydocuments.ucsf.edu/docs/jmvl0000

TABLE B-3 (continued)

Date	Make	Model	TOB	Damage	Flt/Type	Remarks
830107	Boeing	B-727-225	3	M	PXCG	Unable to control cabin pressure. Emergency descent to 10,000 ft. Found rupture in right pack ducting behind APU.
830121	Boeing	B-727-223	119	N	APAX	A blown duct and water separator in pressurization system caused rapid cabin altitude climb. Made emergency descent.
830131	Doug	DC-9-14	75	N	PXCG	Lost control of pressurization system. Regained control at 1400 feet. Replaced cabin pressure controller.
830212	Boeing	B-737-3H4	112	N	APAX	Outside window panel blew out. Descended 10,000 ft. Replaced shattered window and two cracked windows.
830505	Boeing	B-747-151	398	M	APAX	Fiberglass honeycomb panel between fuselage and pylon on left wing cracked. Had light turbulence. Fuel dumped.
830601	Boeing	B-727-730	3	N	APAX	Lost complete pressurization at cruise altitude. All masks deployed. Found bird nest jammed in valve butterfly.
830612	Boeing	B-727-295	83	N	APAX	Smoke in cabin. Made emergency descent. Found left air conditioning pack overheated.

2022933574

Source: https://www.industrydocuments.ucsf.edu/docs/jmvl0000

830821	Doug	DC-10-10	254	N	APAX	Lost all pressurization at cruise altitude. Unable to control cabin pressure. Landed Minneapolis.
830914	Boeing	B-727-224	97	N	APAX	Cabin pressure failed at FL 30. Emergency descent made. Malfunction in cabin pressure control unit.
830916	Doug	DC-9-31	53	N	APAX	Auto pressure failed causing a rapid decompression. Found a malfunctioning controller.
831025	Boeing	B-727-200	138	N	APAX	Right pack tripped. Executed emergency descent to lower altitude. Replaced A.C.M. 250 degree overheat switch.
831110	Swrngn	SA-227	12	N	APAX	Experienced decompression on descent. Crew and passenger oxygen turned on. No malfunctions found.
831116	Boeing	B-727-222	92	N	APAX	Lost pressurization. Regained pressurization at 14,000 ft. Four masks failed to operate. Code 7700 used on descent.
831124	Doug	DC-9	3	N	APAX	Passenger became ill. Emergency descent into El Paso. Met by paramedics and taken to a medical facility.
831222	Boeing	B-727-22	2	N	PXCG	Automatic control of pressurization became inoperative. Replaced manual pressure controller, pack valves, and switch.

2022933575

Source: https://www.industrydocuments.ucsf.edu/docs/jmvl0000

TABLE B-3 (continued)

Date	Make	Model	TOB	Damage	Flt/Type	Remarks
840123	BAC	BAC-111-204	63	N	APAX	Experienced rapid depressurization at altitude. Air conditioning ground access cover assembly had worked loose.
840210	Boeing	B-727-222	88	N	APAX	Had cabin depressurization at cruise altitude. Replaced auto and manual cabin pressure controller.
840218	Doug	DC-9	37	N	APAX	Cabin pressure problem. Emergency descent. Replaced amplifier, actuator and controller of pressurization system.
840229	Doug	DC-8-61	245	N	PXCG	Emergency descent due to loss of pressurization. Found external air conditioning door was torn off.
840307	Boeing	B-737-100	35	N	APAX	Lost cabin pressure. Emergency descent. Door seal of aft air stair door had become dislodged from its track.
840310	Boeing	B-727-23	41	M	PXCG	Rapid decompression at cruise altitude. Found fatigue failure of the fuselage skin forward of the aft cargo door.
840408	Doug	DC-9-31	101	N	PXCG	Unable to control cabin pressure. Descended to a lower altitude. Replaced the pressure amplifier.

2022933576

Source: https://www.industrydocuments.ucsf.edu/docs/jmvl0000

840427	Doug	DC-9-80	39	N	APAX	Lost pressurization control at cruise altitude. Cause undetermined.
840527	Boeing	B-727-222	128	N	PXCG	Pressurization system failed during descent. Replaced the automatic pressure controller and left outflow valve.
840623	Boeing	B-727-223	2	N	APAX	Engine flamed out at cruise altitude. Found a faulty fuel flow transmitter leaking fuel. Replaced fuel transmitter.
840715	Lkheed	L-1011-3851	181	N	APAX	Bomb threat received. Landed Orlando. Went to remote area for evacuation and search. Evaluated via slide. No bomb.
840727	Doug	DC-9-80	2	N	APAX	Loss of pressurization required rapid descent. Outflow valve and number 1 cabin pressure controller replaced.
840808	Doug	DC-9	2	N	APAX	Pressurization warning light came on. Dropped oxygen masks. No loss of pressure. Found cargo door latch faulty.
840808	Boeing	B-727	3	N	APAX	Encountered brief large hail in clouds at FL 330. Cracked windshield. Made descent to VFR [visual flight rule conditions] at FL 270. No injuries.

2022933577

Source: https://www.industrydocuments.ucsf.edu/docs/jmvl0000

TABLE B-3 (continued)

Date	Make	Model	TOB	Damage	Flt/Type	Remarks
840813	Doug	DC-10-10	249	N	APAX	Unable to control pressurization. Found NR 2 pack duct loose and sense line broken.
840915	Doug	DC-10-10	3	N	APAX	Flight officer became unconscious at his duty station. Recovered by use of oxygen. Cause undetermined.
840502	Doug	DC-9	61	N	PXCG	Loss of pressurization at cruise altitude. Changed the outflow valve actuator and differential pressure sensor.
850107	Frchld	FH-227	31	N	APAX	While en route left oil pressure light illuminated. Engine shutdown. Oil blowing out of breather. Replaced engine.
850206	Doug	DC-9-32	57	N	PXCG	Slow decompression en route. Descended until manual operation was obtained. Changed pressurization controller.
850306	Doug	DC-9-32	40	N	APAX	Cabin rate of climb went to max rate. Emergency descent. Control of pressure regained. Flexible coupling failed.

2022933578

Source: https://www.industrydocuments.ucsf.edu/docs/jmvl0000

850512	Boeing	B-727-223	151	M	APAX	Pressurization problems during climb. Emergency descent. Replaced water separator, temp controller, sensor, valve.
850608	Boeing	B-737	115	N	APAX	Pressurization system, auto fail system did not work. Diverted. Cause of malfunction not reported.
850612	Doug	DC-9-32	3	N	PXCG	Depressurized at FL 330. Emergency descent. Passenger fainted. Possible oxygen system malfunction.
850623	Doug	DC-9-80	123	N	PXCG	Decompression occurred at FL 350. Diverted and descended. Maintenance replaced selector, controller, valve actuator.
850923	Boeing	B-727-222	109	N	PXCG	Uncontrollable increase in cabin pressurization. Emergency descent and safe landing. Recurrent undetermined problem.

2022933579

Source: https://www.industrydocuments.ucsf.edu/docs/jmvl0000

APPENDIX C

AIRLINER CABIN SAFETY REGULATIONS AND STANDARDS

This appendix presents information about airliner cabin safety regulations, standards, and recommendations. It is based on items listed in the Cabin Safety Index prepared by the FAA Civil Aeromedical Institute,[12] supplemented by relevant items in the Federal Register since the index was published. It presents relevant regulations and recommendations concerning emergency procedures, nonemergency procedures, equipment, crew training, and passenger information and briefing with respect to fires (Table C-1), decompression (Table C-2), medical emergencies (Table C-3), and ditching and evacuation (Table C-4). Table C-5 deals with preflight and in-flight announcements, and Table C-6 presents a summary of typical air carrier operating procedures with respect to firefighting and firefighting training.

2022933580

Source: https://www.industrydocuments.ucsf.edu/docs/jmvl0000

TABLE C-1

Standards, Regulations, and Recommendations About Fires

Emergency Procedures

Air Carrier Operations Bulletin: Air carrier emergency procedures pertaining to lower-lobe operation should be reviewed.[22]

Nonemergency Procedures

Regulation: No passenger or crew member may smoke while the "no smoking" sign is lighted, and each passenger shall fasten his or her seat belt and keep it fastened while the seat belt sign is on.[11]

Airworthiness Directive: 1,000-h periodic inspections, and repairs as necessary, of all lavatory trash receptacles to ensure fire containment procedures.[21]

Air Carrier Operations Bulletin: Inspection of lavatory before takeoff and periodically during flight.[20]

Equipment

Regulation: Hand fire extinguishers available for all baggage compartments with access by crew members.[8]

Regulation: Hand fire extinguishers available for crew, passenger, and cargo compartments,[6] uniformly distributed in passenger compartments with two Halon 1211 extinguishers per airplane.[15]

Regulation: Protective breathing equipment must be installed for each isolated separate compartment in the airplane, including upper- and lower-lobe galleys.[13]

2022933581

Source: https://www.industrydocuments.ucsf.edu/docs/jmvl0000

TABLE C-1 (continued)

Proposed regulation: Protective breathing equipment that protects crew members from effects of smoke, carbon dioxide, or other harmful gases and that protects crew members while combatting fires on board; one such device must be in each upper- or lower-lobe galley, one on the flight deck, one for use in each accessible cargo compartment, and one within 3 ft of each required fire extinguisher.[25]

Regulation: Floor proximity emergency escape-path marking for passengers when all sources of illumination more than 4 ft above the cabin aisle are obscured.[19]

Regulation: Smoke detectors in each lavatory and galley; automatic fire extinguisher for each lavatory trash receptacle.[15]

Airworthiness Directive: Installation of "no smoking" signs on each side of lavatory doors and ashtrays near lavatory entrances.[21]

Crew Training

Regulation: Instruction in emergency assignments and procedures; location, function, and operation of emergency equipment (i.e., portable fire extinguishers, including the type for different classes of fires); handling of fires on ground and in flight.[3]

Regulation: Actual operation of emergency equipment for each type of aircraft once each 24 calendar mo.[3]

Proposed Regulation: One-time emergency drill to be accomplished during initial training; additional emergency training to be accomplished once each 24 mo.[25]

Air Carrier Operations Bulletin: Initiate ground training or operations bulletins to inform flight deck crews and cabin crews of the causes, characteristics, and hazards associated with fluorescent light ballast fires.[17]

2022933582

Source: https://www.industrydocuments.ucsf.edu/docs/jmvl0000

TABLE C-1 (continued)

Air Carrier Operations Bulletin: Review emergency procedures pertaining to the lower lobe to ensure that procedures and equipment are adequate.[22]

Passenger Information/Briefing

Regulation: Preflight briefing concerning smoking.[2]

Airworthiness Directive: Preflight briefing not to smoke in lavatories.[21]

2022933583

Source: https://www.industrydocuments.ucsf.edu/docs/jmvl0000

TABLE C-2

Standards, Regulations, And Recommendations About Decompression

Emergency Procedures (None)

Nonemergency Procedures

Regulation: Minimal mass flow of supplemental oxygen is specified in terms of mean tracheal oxygen partial pressure (precise specifications depend on exact equipment, altitude, duration at altitude, and other factors).[9]

Equipment

Regulation: Supplemental oxygen must be available for crew and passengers whenever the airplane is operated above 10,000 ft (exact provisions depend on the flight altitude and duration at altitude).[14]

Regulation: Each flight attendant shall, during flight above flight level 250 (25,000 ft), carry portable oxygen equipment with at least a 15-min supply of oxygen, unless enough units or spare outlets and masks are distributed throughout the cabin to ensure immediate availability to each cabin attendant.[14]

Crew Training

Regulation: Instruction in emergency assignments and procedures; location, function, and operation of emergency equipment; instruction in handling emergency situations (including rapid depressurization).[3]

Regulation: Crew members who serve in operations above 25,000 ft must receive instruction in respiration, hypoxia, duration of consciousness without supplemental oxygen at altitude, gas expansion, gas bubble formation, physical phenomena, and incidents of depressurization.[3]

2022933584

Source: https://www.industrydocuments.ucsf.edu/docs/jmvl0000

TABLE C-2 (continued)

Passenger Information/Briefing

Regulation: Before flight is conducted above flight level 250 (25,000 ft), a crew member shall instruct the passengers on the necessity of using oxygen in the event of cabin depressurization.[14]

2022933585

Source: https://www.industrydocuments.ucsf.edu/docs/jmvl0000

TABLE C-3

Standards, Regulations, and Recommendations
About Medical Emergencies

Emergency Procedures (None)

Nonemergency Procedures

Regulation: Conditions under which a passenger may carry and operate equipment for the storage, generation, or dispensing of oxygen are specified.[10]

Equipment

Regulation: Approved first-aid kits for treatment of injuries likely to occur in flight or in minor accidents must be provided (the number of kits varies according to the number of passengers carried).[6]

Regulation: Emergency medical equipment; one medical kit would be required on each passenger-carrying flight and should contain equipment and drugs required to provide basic life support during medical emergencies that might occur during flight, such as myocardial infarction, severe allergic reactions, acute asthma, insulin shock, protracted seizures, and childbirth.[18]

Crew Training

Regulation: Instruction in emergency assignments and procedures; location, function, and operation of emergency equipment (including first-aid equipment and its proper use); instruction in handling emergency situations (including illness, injury, or other abnormal situation involving passengers or crew members).[3]

Regulation: Familiarization with the emergency medical kit.[18]

2022933586

Source: https://www.industrydocuments.ucsf.edu/docs/jmvl0000

TABLE C-3 (continued)

Passenger Information/Briefing

Regulation: Crew members who serve in operations above 25,000 ft must receive instruction in respiration, hypoxia, duration of consciousness without supplemental oxygen at altitude, gas expansion, gas bubble formation, physical phenomena, and incidents of depressurization.[3]

Passenger Information/Briefing (None)

2022933587

Source: https://www.industrydocuments.ucsf.edu/docs/jmvl0000

TABLE C-4

Standards, Regulations, and Recommendations
About Ditching and Evacuation

Emergency Procedures

Air Carrier Operations Bulletin: In case of an unplanned emergency landing, the flight attendants might have only enough time to give a short command, such as "lean over" or "grab your ankles".[16]

Air Carrier Operations Bulletin: In case of a planned emergency landing, passengers should be briefed on proper bracing positions.[16]

Nonemergency Procedures

Air Carrier Operations Bulletin: Principal operations inspectors should ensure that flight attendants are fully aware that escape slides should be inflated manually if autoinflation fails.[23]

Air Carrier Operations Bulletin: Principal operations inspectors should evaluate seat spacing and passenger briefing card brace positions.[16]

Equipment

Regulation: Each passenger-carrying landplane emergency exit (other than over-the-wing) that is more than 6 ft from the ground with the airplane on the ground and the landing gear extended must have an approved means to assist occupants in descending to the ground.[1]

Regulation: An approved flotation means or a life preserver must be within easy reach of each seated occupant for extended over-water operation;[7] enough liferafts to accommodate all occupants must be provided;[8] each certificate holder shall demonstrate the effectiveness of emergency evacuation equipment and procedures and shall describe these in its manual.[4]

2022933588

Source: https://www.industrydocuments.ucsf.edu/docs/jmvl0000

TABLE C-4 (continued)

Crew Training

Regulation: Instruction in emergency assignments and procedures; location, function, and operation of emergency equipment, including, for ditching: cockpit preparation; crew coordination; passenger briefing and cabin preparation; donning and inflation of life preservers; removal and inflation of each type of liferaft; transfer of each type of slide/raft from one door to another; deployment, inflation, and detachment of each type of slide/raft; use of liferaft; boarding of passengers and crew into a raft or a slide/raft pack.[3]

Air Carrier Operations Bulletin: Principal operations inspectors must continually review their assigned air carriers' emergency evacuation procedures.[24]

Passenger Information/Briefing

Regulation: In extended over-water operations, all passengers are to be orally briefed on the location and operation of life preservers, liferafts, and other flotation means, including a demonstration of the method of donning and inflating a life preserver.[2]

2022933589

Source: https://www.industrydocuments.ucsf.edu/docs/jmvl0000

TABLE C-5

Additional Passenger Briefing

Preflight Announcements

Regulation: Smoking; location of emergency exits; use of safety belts, including how to fasten and unfasten them; location and use of required emergency flotation devices.[2]

In-flight Announcements

Regulation: Immediately before or immediately after the seatbelt sign is turned off, an announcement shall be made that passengers should keep their seatbelts fastened while seated.[2]

2022933590

Source: https://www.industrydocuments.ucsf.edu/docs/jmvl0000

TABLE C-6

Summary of Typical Air Carrier Operating Procedures with Respect to Firefighting and Firefighting Training

Firefighting

Cabin crew member discovering fire to identify the source and type of fire and switch off any electric supply involved, take nearest appropriate fire extinguisher, and attack the fire.

Second cabin crew member to be called to alert the captain and the senior member of the cabin crew.

Senior member of the cabin crew takes charge of firefighting, ensures that all necessary resources are available, and ensures that all portable oxygen bottles are removed from the scene.

Passengers are advised to keep heads down and to cover noses and mouths; if time and conditions permit, damp face cloths would be distributed.

Firefighting Training

On initial course, cabin crew are trained in the use of fire extinguishers and smoke protection hoods; practical use of equipment at the fire training ground is included; each student experiences a short period in a smoke chamber.

Students are required to demonstrate proficiency in firefighting in a synthetic smoke-filled cabin mockup.

Every third year, cabin fire and smoke is the main theme for flight crew and cabin crew annual checks; audiovisual review and familiarization with equipment under guidance of instructor; fire-smoke situation presented to cabin crew without warning in cabin mockup to check proficiency; flight crew briefed on cabin fire drill.

2022933591

Source: https://www.industrydocuments.ucsf.edu/docs/jmvl0000

REFERENCES

1. Additional emergency equipment. Code of Federal Regulations, Title 14, Pt. 121.310. Washington, D.C.: U.S. Government Printing Office, 1985.

2. Briefing passengers before takeoff. Code of Federal Regulations, Title 14, Pt. 121.571. Washington, D.C.: U.S. Government Printing Office, 1985.

3. Crewmember emergency training. Code of Federal Regulations, Title 14, Pt. 121.417. Washington, D.C.: U.S. Government Printing Office, 1985.

4. Emergency and emergency evacuation duties. Code of Federal Regulations, Title 14, Pt. 121.397. Washington, D.C.: U.S. Government Printing Office, 1985.

5. Emergency equipment for extended over-water operations. Code of Federal Regulations, Title 14, Pt. 121.339. Washington, D.C.: U.S. Government Printing Office, 1985.

6. Emergency equipment. Code of Federal Regulations, Title 14, Pt. 121.309. Washington, D.C.: U.S. Government Printing Office, 1985.

7. Emergency flotation means. Code of Federal Regulations, Title 14, Pt. 121.340. Washington, D.C.: U.S. Government Printing Office, 1985.

8. Fire precautions. Code of Federal Regulations, Title 14, Pt. 121.221. Washington, D.C.: U.S. Government Printing Office, 1985.

9. Minimum mass flow of supplemental oxygen. Code of Federal Regulations, Title 14, Pt. 25.1443. Washington, D.C.: U.S. Government Printing Office, 1985.

10. Oxygen for medical use by passengers. Code of Federal Regulations, Title 14, Pt. 121.574. Washington, D.C.: U.S. Government Printing Office, 1985.

2022933592

Source: https://www.industrydocuments.ucsf.edu/docs/jmvl0000

11. Passenger information. Code of Federal Regulations, Title 14, Pt. 121.317. Washington, D.C.: U.S. Government Printing Office, 1985.

12. Pollard, D. W., J. A. Steen, W. J. Biron, and R. L. Cremer. Cabin Safety Subject Index. FAA-AM-84-1. Oklahoma City, Okla.: U.S. Federal Aviation Administration, Civil Aeromedical Institute, 1984.

13. Protective breathing equipment. Code of Federal Regulations, Title 14, Pt. 25.1439. Washington, D.C.: U.S. Government Printing Office, 1985.

14. Supplemental oxygen for emergency descent and for first aid; turbine engine powered airplanes with pressurized cabins. Code of Federal Regulations, Title 14, Pt. 121.333. Washington, D.C.: U.S. Government Printing Office, 1985.

15. U.S. Federal Aviation Administration. Airplane cabin fire protection: Final rule. Federal Register 50(29 March):12726-12733, 1985.

16. U.S. Federal Aviation Administration. Brace for impact positions. ACOB No. 1-76-23, para. 224. In Air Carrier Operations Bulletins, Consolidated Reprint. Washington, D.C.: U.S. Federal Aviation Administration, 1985.

17. U.S. Federal Aviation Administration. Cabin fluorescent light ballast fires. ACOB No. 8-82-1, para. 966. In Air Carrier Operations Bulletins, Consolidated Reprint. Washington, D.C.: U.S. Federal Aviation Administration, 1985.

18. U.S. Federal Aviation Administration. Emergency medical equipment: Final rule. Federal Register 51(9 Jan.):1218-1223, 1986.

19. U.S. Federal Aviation Administration. Floor proximity emergency escape path marking: Final rule. Federal Register 49(26 Oct.):43182-43186, 1984.

2022933593

Source: https://www.industrydocuments.ucsf.edu/docs/jmvl0000

20. U.S. Federal Aviation Administration. In-flight lavatory fires. ACOB No. 1-76-17, para. 218. In Air Carrier Operations Bulletins, Consolidated Reprint. Washington, D.C.: U.S. Federal Aviation Administration, 1985.

21. U.S. Federal Aviation Administration. Inspections of Lavatory Trash Receptacles for Fire Containment Procedures. Airworthiness Directive 74-09-08, Docket No. 13603.

22. U.S. Federal Aviation Administration. Problems associated with lower lobe galleys. ACOB No. 1-76-14, para. 215(4). In Air Carrier Operations Bulletins, Consolidated Reprint. Washington, D.C.: U.S. Federal Aviation Administration, 1985.

23. U.S. Federal Aviation Administration. Procedures and training for emergency evacuations. ACOB No. 1-76-21, para. 222. In Air Carrier Operations Bulletins, Consolidated Reprint. Washington, D.C.: U.S. Federal Aviation Administration, 1985.

24. U.S. Federal Aviation Administration. Procedures and training for emergency evacuations. ACOB No. 8-76-10, para. 911. In Air Carrier Operations Bulletins, Consolidated Reprint. Washington, D.C.: U.S. Federal Aviation Administration, 1985.

25. U.S. Federal Aviation Administration. Protective breathing equipment: Notice of proposed rulemaking. Federal Register 50(Oct. 10):41452-41459, 1985.

2022933594

Source: https://www.industrydocuments.ucsf.edu/docs/jmvl0000

GLOSSARY

ACOB	Air Carrier Operations Bulletin.
ACGIH	American Conference of Governmental Industrial Hygienists.
ACM	See Air-cycle machine.
ACRE	Aircraft Radiation Exposure, a model of cosmic-radiation exposure of aircraft passengers.
Aerosol	A suspension of liquid droplets or solid particles in a gas.
Air carrier	A person or group of persons using aircraft to transport persons, property, and mail.
Aircraft	A vehicle designed or used for flight.
Air-cycle machine	A turbine-compressor combination used to reduce air temperature by extracting energy from an air stream; part of the environmental control unit. (Abbr., ACM.)
Air exchange	Replacement of equivalent air volume in a compartment with fresh air.
Air-exchange rate	Number of air exchanges per unit time.
Air pack	See Environmental control unit.

2022933595

Source: https://www.industrydocuments.ucsf.edu/docs/jmvl0000

Airplane	A heavier-than-air, power-driven, fixed-wing aircraft that is supported by the dynamic reaction of air against its wings.
Airworthy	Suitable for safe flight.
Angina pectoris	Severe restricting pain in the chest, usually caused by insufficient blood flow to the heart muscle.
APU	See Auxiliary power unit.
ASHRAE	American Society of Heating, Refrigerating, and Air-Conditioning Engineers, Inc.
Auxiliary power unit	A power unit that can be used in addition to the main sources of power. (Abbr., APU.)
Avionics	Aviation electric and electronic equipment in the cockpit.
B-747-SP	Special-performance model of the B-747 that is equipped with a catalytic converter to decompose atmospheric ozone; used for routes through ozone-laden portions of the atmosphere.
Background radiation	Natural radiation in the environment, including cosmic radiation and radiation from naturally radioactive elements.
Bleed air	Air from the compressor used for cabin ventilation.
Bypass ratio	Flow ratio of low-pressure air in the fan to high-pressure air in the engine core.
CAB	Civil Aeronautics Board (now defunct).

2022933596

Source: https://www.industrydocuments.ucsf.edu/docs/jmvl0000

Cabin	The sector of an aircraft occupied by passengers.
Cabin crew	Flight attendants.
Carboxyhemoglobin (COHb)	Combination of carbon monoxide and hemoglobin; at high concentrations, carboxyhemoglobin interferes with the transfer of carbon dioxide and oxygen in the blood, causing asphyxiation.
Certificated route air carrier	An air carrier holding a Certificate of Public Convenience and Necessity from the Department of Transportation, authorized to provide scheduled service over specified routes.
Certification	The process by which FAA approves all air carriers, pilots, aircraft models, etc., to ensure compliance with applicable statutes and regulations.
cfm	Cubic feet per minute.
CFR	Code of Federal Regulations.
CO	Carbon monoxide.
CO_2	Carbon dioxide.
COHb	See Carboxyhemoglobin.
Commuter airline	An air carrier that makes at least five scheduled round trips per week with small aircraft.
COPD	Chronic obstructive pulmonary disease.
Cosmic radiation	Energetic particles of extraterrestrial origin that strike the earth's atmosphere, as well as secondary particles generated by these interactions.
Depressurization	Loss of cabin pressure during flight.

2022933597

Source: https://www.industrydocuments.ucsf.edu/docs/jmvl0000

Disinsection	Use of insecticides to exterminate insect pests.
ECAC	European Civil Aviation Conference.
ECU	See Environmental control unit.
ECS	See Environmental control system.
Enplanements	The number of times that revenue passengers board flights; a passenger who changes from Flight A to Flight B en route to a destination counts as two enplanements.
Environmental control system	The total air-conditioning, heating, ventilation, and pressurization system on an aircraft, which provides occupants with a suitably controlled atmosphere to maintain comfort and safety; consists of several environmental control units. (Abbr., ECS.)
Environmental control unit	Equipment used to condition high-temperature, high-pressure air from a jet engine before delivery to the cabin; usually consists of an air-cycle machine and one or more heat exchangers. Also called air pack. (Abbr., ECU.)
Environmental tobacco smoke	Total air pollution due to burning of tobacco products, including sidestream and exhaled smoke. (Abbr., ETS)
ETS	See Environmental tobacco smoke.
FAA	Federal Aviation Administration.
FAR	Federal Air Regulation.
FEF	See Forced expiratory flow.
FEV	See Forced expiratory volume.
FEV_1	Maximal volume of air that can be exhaled in 1 s.

2022933598

Source: https://www.industrydocuments.ucsf.edu/docs/jmvl0000

Flashover	The point during a fire at which the temperature in a compartment becomes high enough for all materials and gases to ignite spontaneously.
Flight crew	The pilots, navigators, engineers, and others needed to operate the aircraft.
Flight deck	Cockpit area of an aircraft.
Flight level	A level of constant atmospheric pressure related to a reference point of 29.92 in. of mercury; stated in digits that represent hundreds of feet, i.e., flight level 255 indicates a barometric altitude of 25,500 ft.
Floor proximity escape-route markers	Illuminated exit signs near the floor designed to be visible in a smoke emergency.
Forced expiratory flow	The average flow rate during forced expiration in a designated interval of the expiration period. (Abbr., FEF.) The interval is indicated by a subscript; e.g., $FEV_{25-75\%}$ refers to the average flow rate during the middle half of the expiration period.
Forced expiratory volume	Maximal volume that can be exhaled in a specific period. (Abbr., FEV.) The period, in seconds, is indicated by a subscript, e.g., FEV_1.
Galley	Food preparation area of an aircraft.
GAO	U.S. General Accounting Office.
Gasper	Individual air outlet usually placed in the ceiling above each seat, allowing the passenger to regulate the volume and direction of air flowing from the gasper to the seat.

2022933599

Source: https://www.industrydocuments.ucsf.edu/docs/jmvl0000

Ground fumes	Airport pollution, including emission from aircraft on the ground, maintenance vehicles, and airport transportation vehicles.
HVAC	Heating, ventilation, and air-conditioning.
Hypoxia	A condition resulting from a decrease in oxygen tension in the inspired air or a reduction in the oxygen-carrying capacity of the blood.
Load factor	See Passenger load factor.
Lower lobe	The part of an aircraft below the main floor of the cabin.
Mainstream smoke	Smoke that a smoker inhales directly from a cigarette, or other tobacco product.
Makeup air	Outside (fresh) air that is used in aircraft ventilation, which must be conditioned by heating, cooling, filtering, etc., before being delivered to occupied spaces.
Microbial aerosols	A suspension of microorganisms in air.
mrem	Millirem, 0.001 rem.
Myocardial infarction	Sudden heart failure caused by interruption of blood supply to the heart muscle due to blockage of blood vessels or necrosis (death) of tissue in part of the heart due to this blockage.
Narrow-body aircraft	An airplane with only one passenger aisle and generally fewer than 200 seats, e.g., B-727, B-737, B-757, DC-9-80, and BAE-146.
NO_2	Nitrogen dioxide.

2022933600

Source: https://www.industrydocuments.ucsf.edu/docs/jmvl0000

Nonscheduled carriers	Air carriers that provide charter services.
NTSB	National Transportation Safety Board.
Offgassing	Emission of low-vapor-pressure volatile organic vapors into the air, e.g., release of formaldehyde from urea-formaldehyde resin used to glue plywood.
OSHA	Occupational Health and Safety Administration.
Outside air	Air from outside the aircraft; outside air is mixed with air inside the aircraft, thereby diluting or "flushing" stale air to the outside.
Pack	See Environmental control unit.
Part 121 airlines	Certificated-route air carriers that operate under the rules of Title 14, Part 121, of the Code of Federal Regulations.
Part 135 airlines	Air carriers, primarily commuter airlines and air taxis, that operate under the rules of Title 14, Part 135, of the Code of Federal Regulations.
Partial pressure	Pressure exerted by a single gas in a mixture of gases; commonly expressed in millimeters of mercury.
Passenger flight hours	The number of passengers multiplied by the flight duration in hours.
Passenger load factor	Percentage of aircraft seating capacity that is sold and used.
Pathogen	Microorganism capable of causing disease.
pCO_2	Partial pressure of carbon dioxide.

2022933601

Source: https://www.industrydocuments.ucsf.edu/docs/jmvl0000

PEFR	Peak expiratory flow rate.
Plenum	A common chamber in which air from different sources is mixed before being distributed to the cabin; the air can come from heating units, from the outside (fresh air), and from inside the aircraft (recirculated air).
Pneumothorax	Presence of gas in the chest cavity outside the lungs.
pO_2	Partial pressure of oxygen.
ppm	Parts per million.
Pressurization system	The part of an aircraft's environmental control system that keeps cabin pressure relatively constant, not exceeding the legal maximal equivalent altitude of 8,000 ft.
Protective breathing device	A device worn over the nose and/or mouth that allows the wearer to breathe relatively clean air for a short time in the presence of smoke and toxic fumes.
Rad	The unit of absorbed dose of radiation equal to 100 ergs/g.
Recirculation air	Air that is reused for aircraft ventilation after being removed from the cabin; it is usually filtered to remove particles, aerosols, and gaseous tars from tobacco smoke and is usually diluted with fresh air before being returned to the cabin.
Relative humidity	The amount of moisture in air compared with the maximal amount that the air could contain at the same temperature; expressed as a percentage. (Abbr., RH.)

2022933602

Source: https://www.industrydocuments.ucsf.edu/docs/jmvl0000

rem	Roentgen equivalent man; unit of dose of ionizing radiation that produces in man the same biologic effect as 1 roentgen of x rays or gamma rays.
Respirable suspended particles	Airborne material—e.g., dusts, mists, smoke, and fumes—that is small enough (approximately 2.5 μm or less) to penetrate the lungs on inhalation. (Abbr., RSP.)
Revenue passengers	Passengers who purchase tickets.
Revenue passenger mile	One revenue passenger transported 1 mile.
RH	See Relative humidity.
RSP	See Respirable suspended particles.
Sarcoidosis	A chronic disease of unknown cause characterized by widespread lesions, usually in the lungs and also in the lymph nodes, skin, liver, spleen, eyes, fingers, and parotid salivary glands.
Scheduled airline	An airline that operates according to a published flight schedule specifying times, days of the week, and points between which flights are performed.
Seat hours	The number of seats installed multiplied by the flight duration in hours.
Sidestream smoke	Aerosol emitted into the air from a smoldering cigarette.
Smoke hood	A type of protective breathing device that covers the head and face, to protect the wearer from breathing smoke and toxic fumes.

2022933603

Source: https://www.industrydocuments.ucsf.edu/docs/jmvl0000

Smoke mask	A type of protective breathing device that covers the mouth, to protect the wearer from breathing smoke and toxic fumes.
Stratosphere	The atmospheric region above the tropopause, having an upper limit of approximately 260,000 ft (80 km); it has very little moisture; its temperature increases with altitude.
"Stretched" aircraft	An aircraft in which seating capacity has been increased beyond the designed capacity.
Total suspended particles	Total mass of particles suspended in air; includes particles smaller than or equal to 10 μm. (Abbr., TSP.)
Transport category aircraft	Aircraft intended for use in transportation of passengers; these aircraft must meet design, structural, and performance requirements of 14 CFR 25.
Tropopause	The boundary between the troposphere and the stratosphere.
Troposphere	The atmospheric region in which all weather phenomena occur, from the surface of the earth up to an altitude of approximately 26,200 ft (8 km) above the poles of the earth— at midlatitudes approximately 36,000 ft (11 km) and over the equator approximately 52,500 ft (16 km); temperature steadily decreases as altitude increases.
TSP	See Total suspended particles.
Type certification	Approval by FAA of a new aircraft design, or significant modification of an existing design, to ensure compliance with all applicable statutes and regulations.

2022933604

Source: https://www.industrydocuments.ucsf.edu/docs/jmvl0000

Vapor pressure	The pressure of a vapor in equilibrium with its liquid or solid form.
Ventilation	The process of supplying and removing air mechanically to and from occupied spaces of an aircraft; air might or might not be conditioned.
Ventilation rate	Amount of fresh air (outside air) supplied to occupants; measured in cubic feet per minute per occupant.
Wide-body aircraft	An aircraft with two passenger aisles, seats for 7-11 passengers in each row (in coach), and usually a total of 200 or more seats, e.g., B-747, B-767, DC-10, L-1011, and A-300.

2022933605

Source: https://www.industrydocuments.ucsf.edu/docs/jmvl0000